15T 4250

Suzuki Jimny Md. 2018 + 2021

Side bar 42 mm with plate appearance
Flankenschutzrohr 42 mm mit Blech-Auftritt
Côté bar 42 mm avec plaque apparence

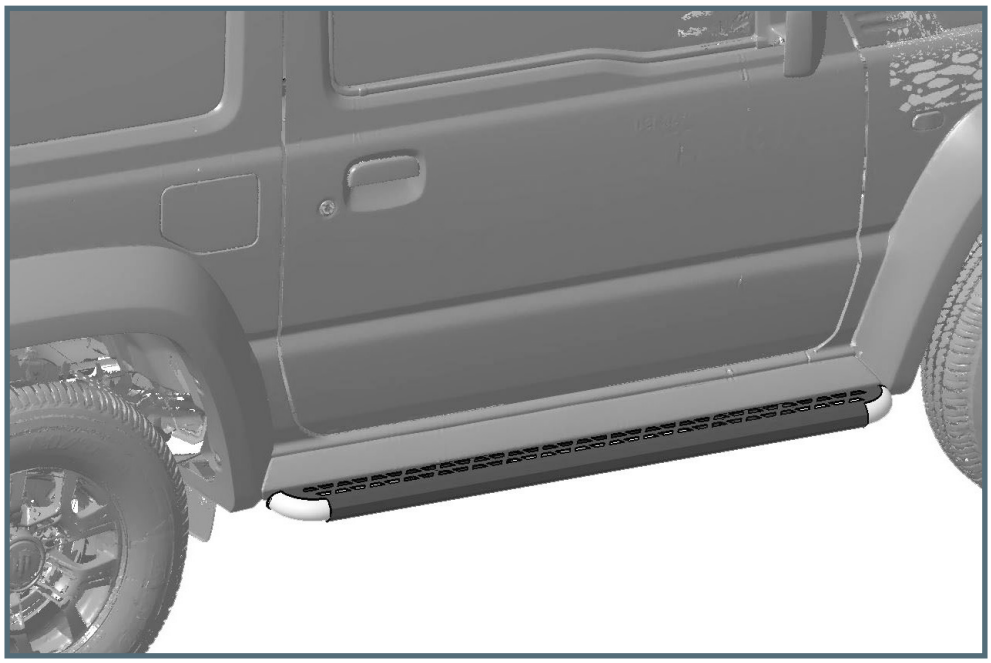

compatible with 15T4957

Assembly Instruction

Montageanleitung • Instructions de montage

50 Minuten

article no.:
15T4250 (S) inox
15T5250 black steel

Revision 3: 09.09.2021

ULLSTEIN CONCEPTS GMBH

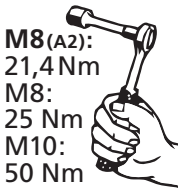

mounting kit: 15T9250

	M8x25; DIN 933 A2	8x
	M8x25; DIN 933 Zn	2x
	M8x70; DIN 933 Zn	8x
	M10x40; DIN 933 Zn	2x
	Ø10,5; DIN 125 Zn	1x
	Ø8,4; DIN 9021 Zn	4x
	M8; DIN 934 Zn	14x
	M10; DIN 934 Zn	1x
	SW 13	16x

1 15T4250.1(S)_R / 15T4250.2(S)_L 2x

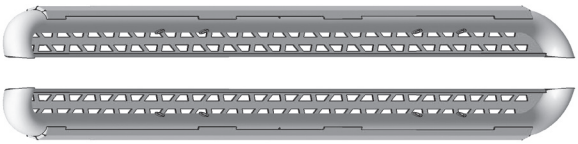

2 15T5547 1x

3 15T5546 1x

4 15T5348 2x

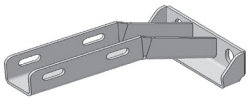

5 15T5349 2x

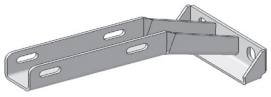

6 19R5267 4x

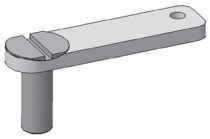

M8

7 15T5294 2x

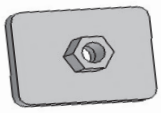

M10

8 15T5721 1x

M10

9 005498 8x

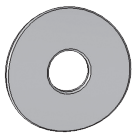

Ø9 A2

10 005497 20x

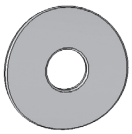

Ø9 Zn

11 005493 2x

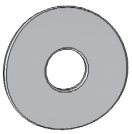

Ø11 Zn

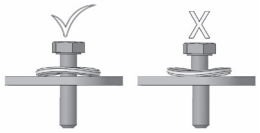

article no.:
15T4250 (S) inox
15T5250 black steel

Revision 3: 09.09.2021

ULLSTEIN CONCEPTS GMBH

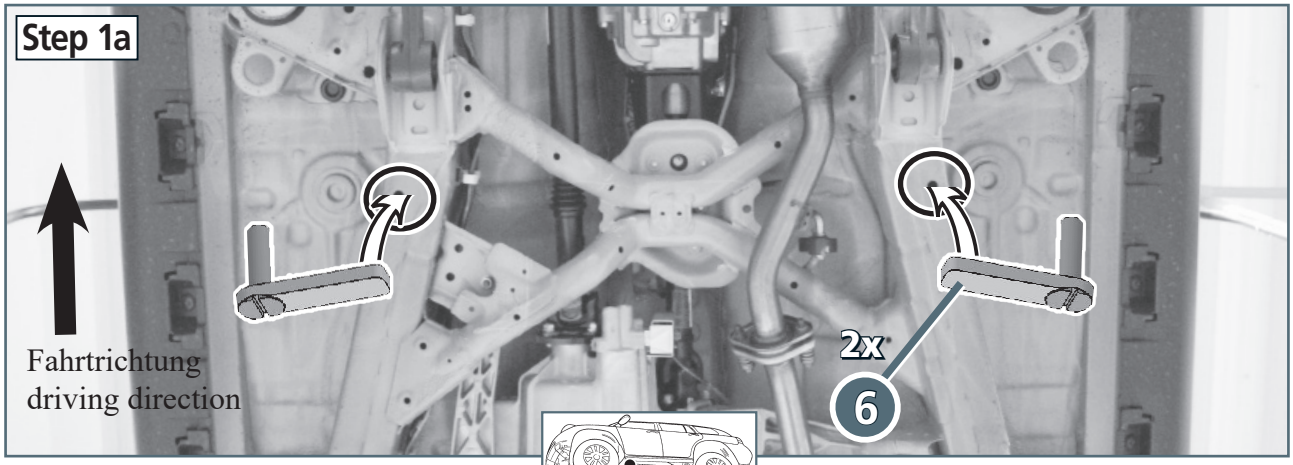
Step 1a
Fahrtrichtung
driving direction
2x
6

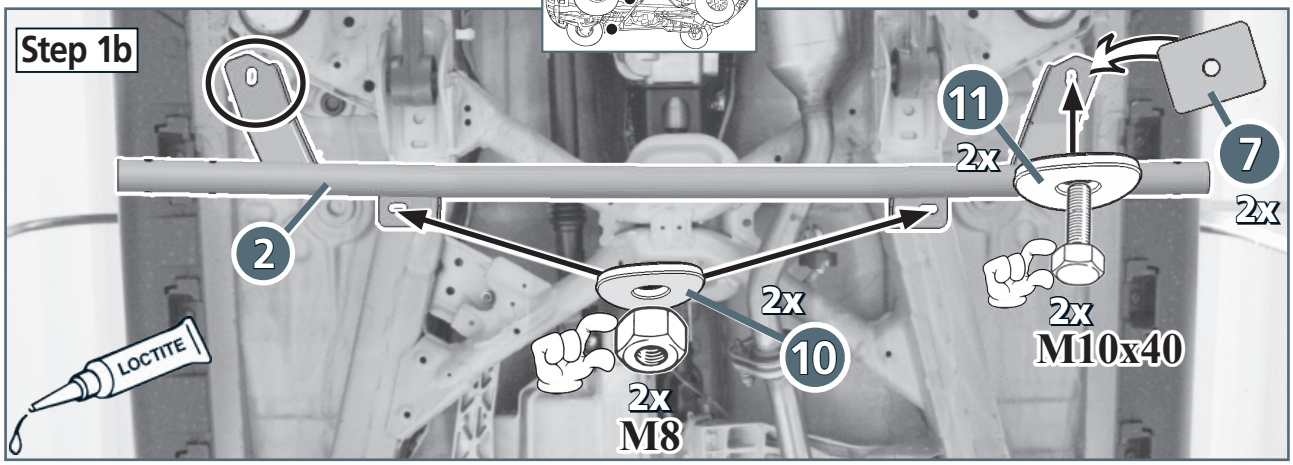
Step 1b
11
2x
7
2x
2
2x
10
2x
M10x40
2x
M8
LOCTITE

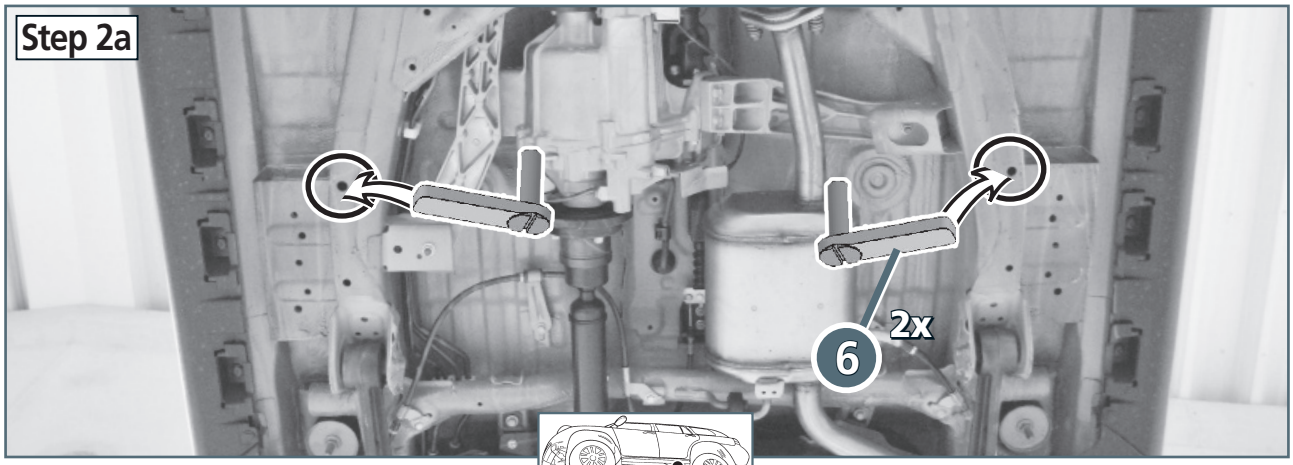
Step 2a
2x
6

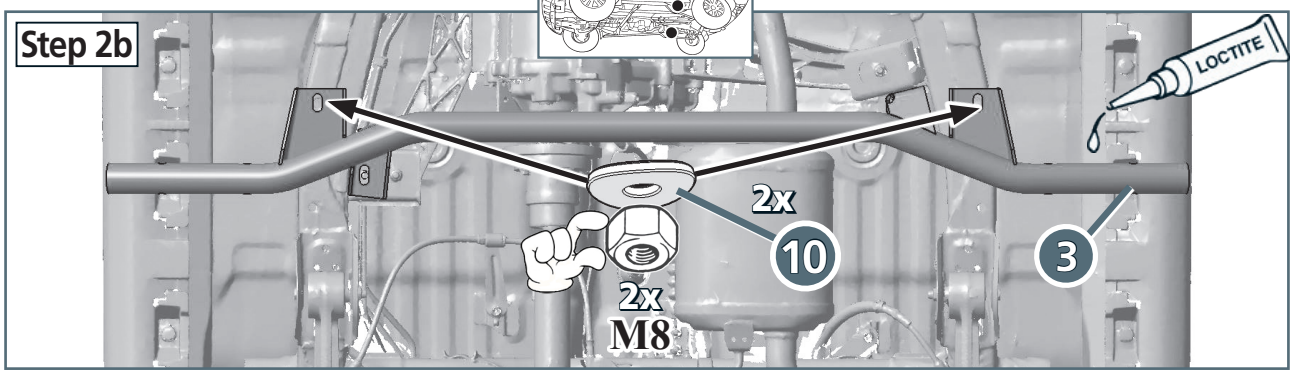
Step 2b
LOCTITE
2x
10
3
2x
M8

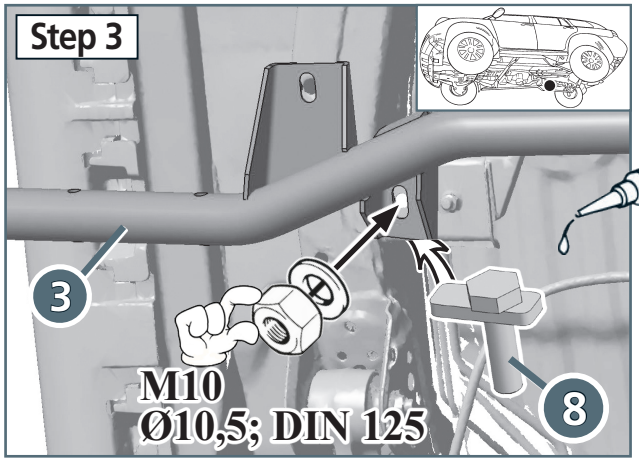
Step 3
3
M10
Ø10,5; DIN 125
8

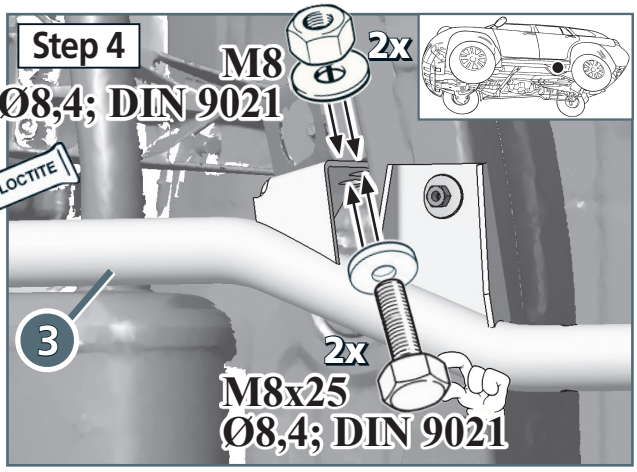
Step 4
M8
Ø8,4; DIN 9021
2x
LOCTITE
3
2x
M8x25
Ø8,4; DIN 9021

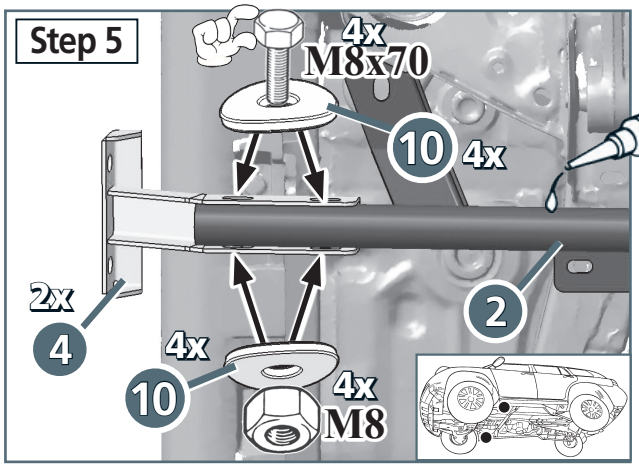
Step 5
4x
M8x70
10
4x
2x
4
2
4x
10
4x
M8

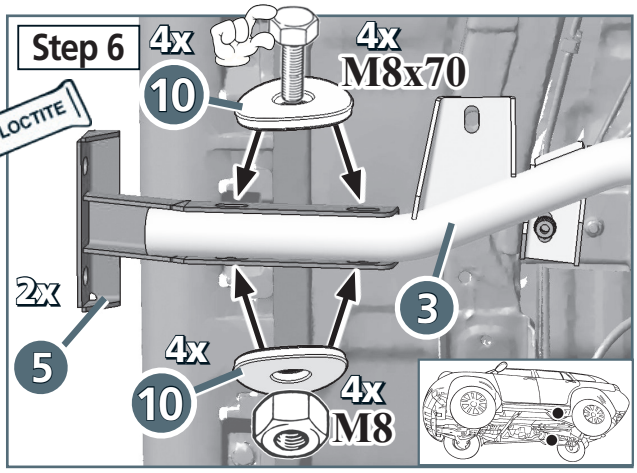
Step 6
4x
10
4x
M8x70
LOCTITE
2x
5
3
4x
10
4x
M8

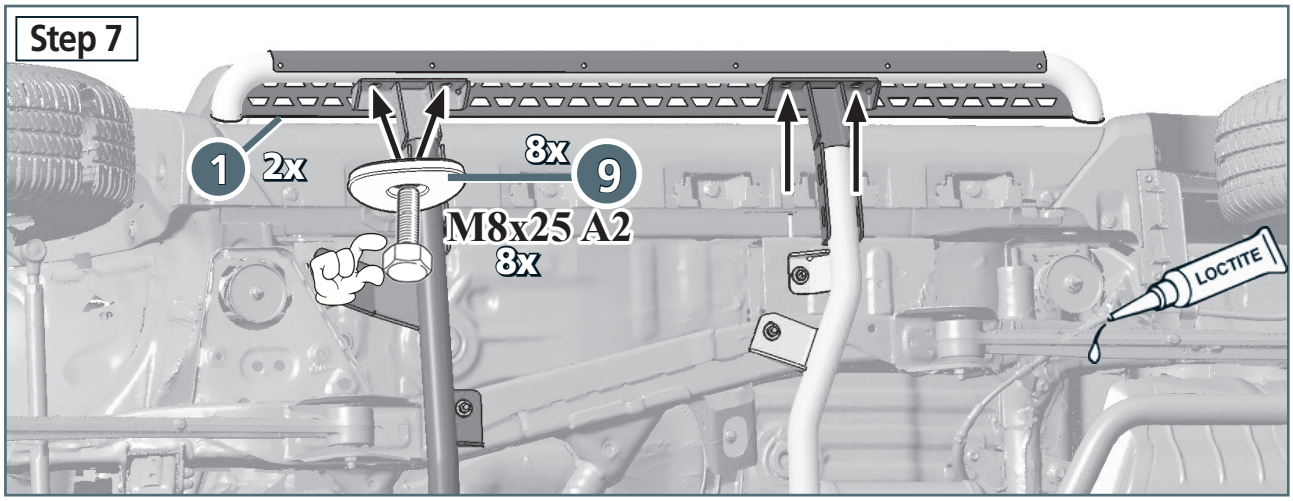
Step 7
1
2x
8x
9
M8x25 A2
8x
LOCTITE

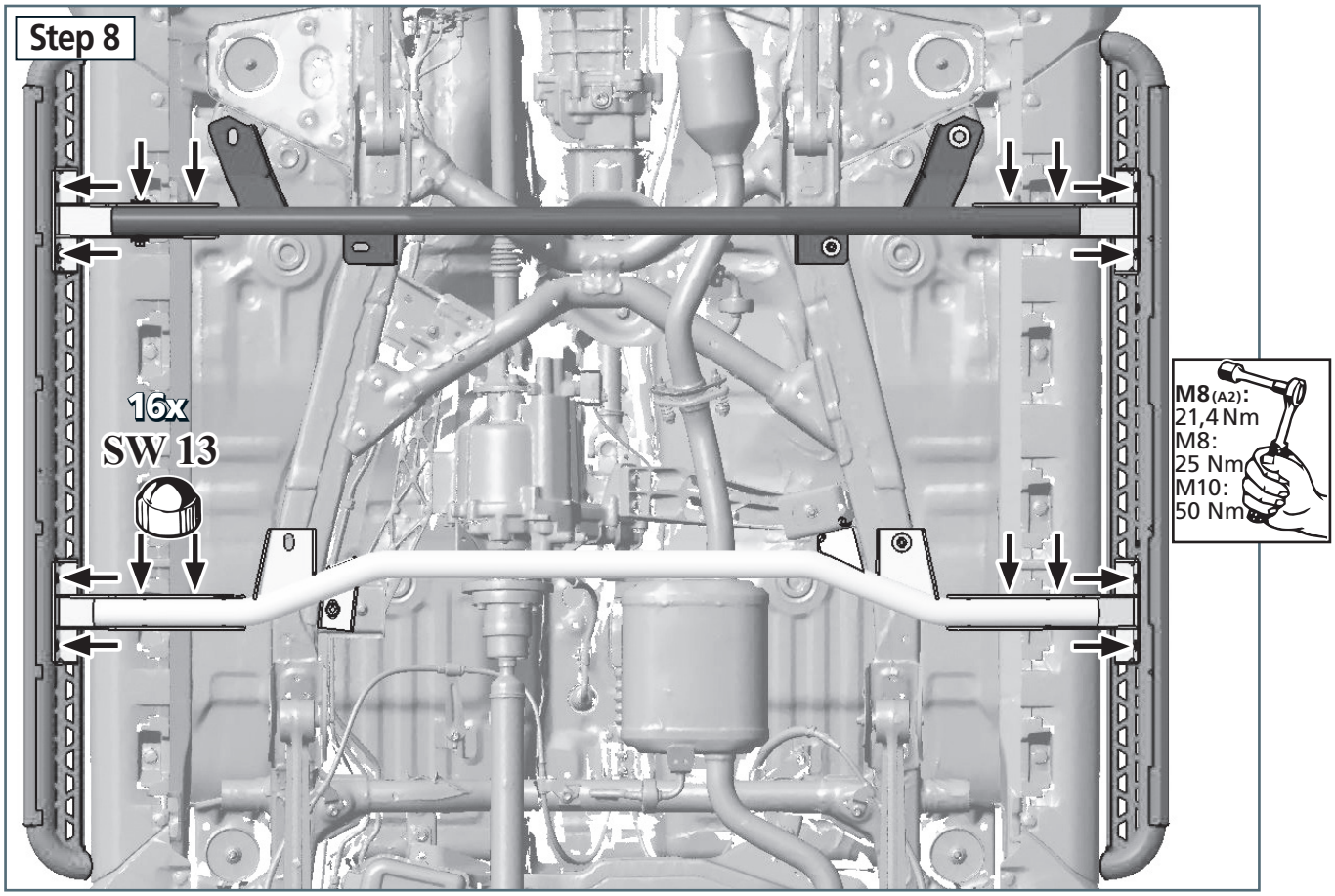
Step 8
16x
SW 13
M8(A2):
21,4 Nm
M8:
25 Nm
M10:
50 Nm

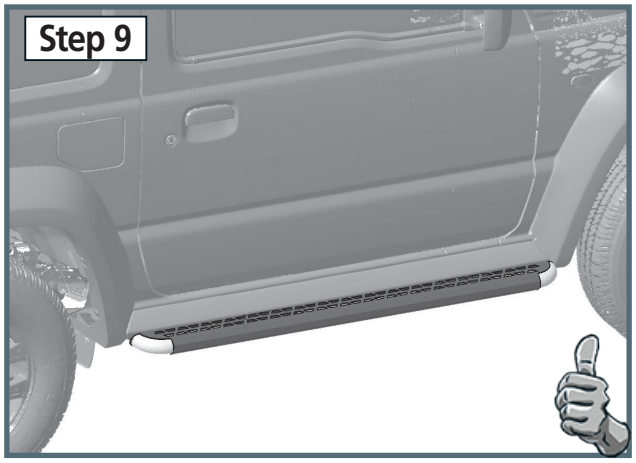
Step 9