Mountain Top®
INDUSTRIES APS

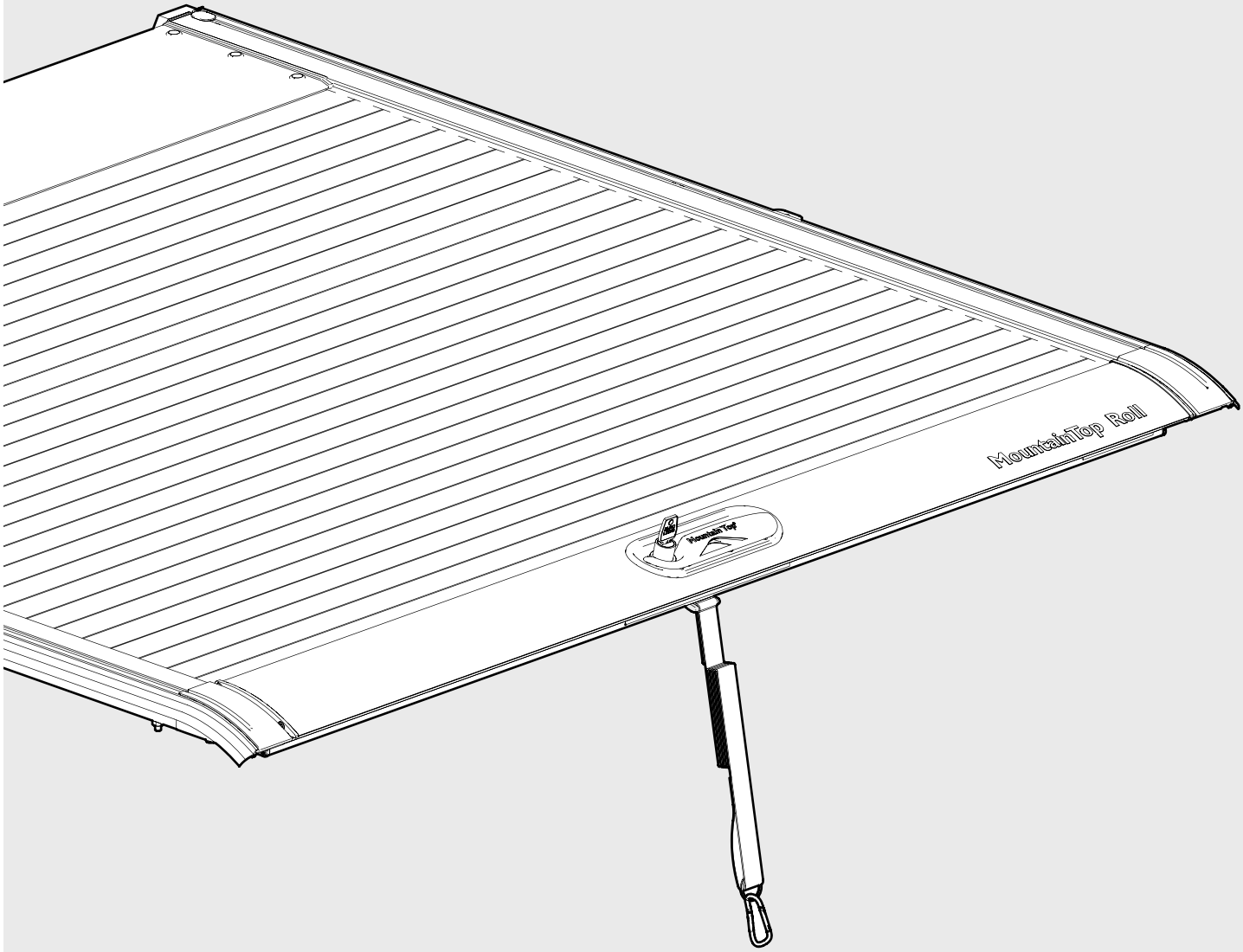

Mountain Top® Roll

Installation manual

ULLSTEIN CONCEPTS GMBH

DOWNLOAD PDF

PRINT FORMAT: A5 BOOKLET

© 2017 Mountain Top Industries APS

ISSUE 01 / 03/05-2017 / MTI 886 049

Parts

A

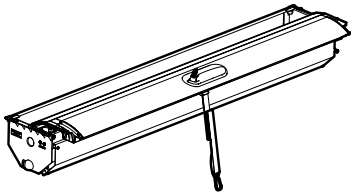

x 1

B

x 1

C

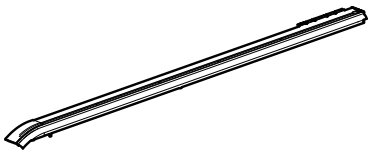

x 1

D

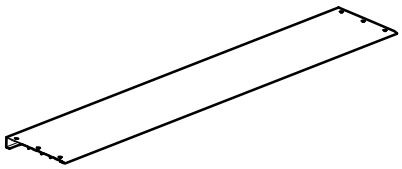

x 1

E

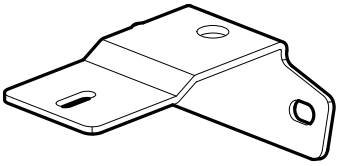

x 2

F

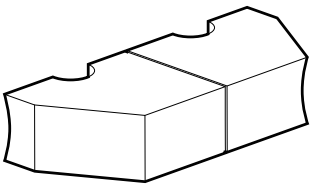

x 1

G

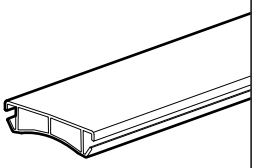

x 1

H

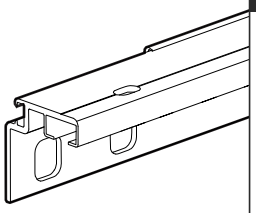

x 1

I

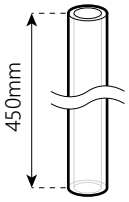

x 2

J

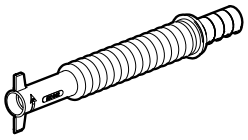

x 2

Kit

K

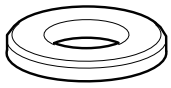

x 2

L

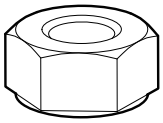

x 2

M

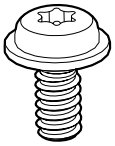

x 4

N

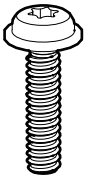

x 2

O

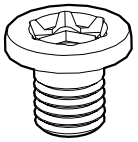

x 6

Kit

P

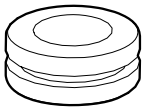

x 2

Q

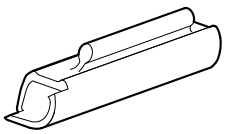

x 1

R

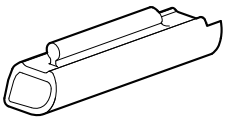

x 1

S

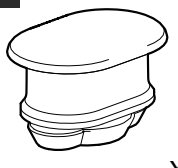

x 2

T

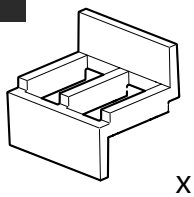

x 2

Kit

U

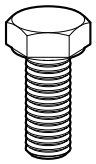

x 4

V

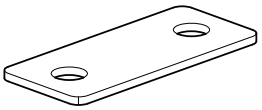

x 2

Kit

W

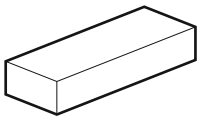

x 2

X

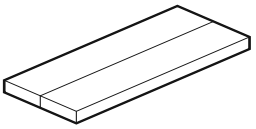

x 1

Kit

Y

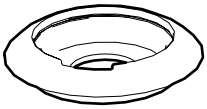

x 6

Z

x 6

Manual(s)

x 1

x 1

Tools and materials needed

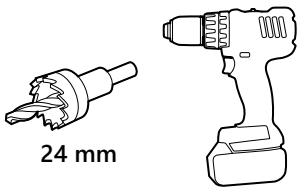

1 - 25 Nm

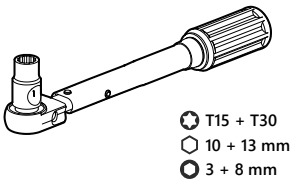

Rust protection
Rostschutzmittel
Anti-rouille
Anti roest

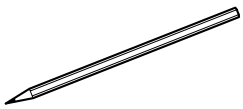

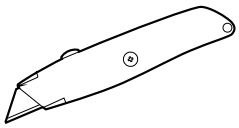

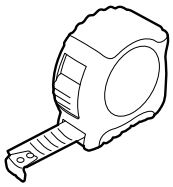

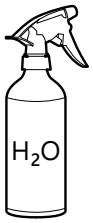

1 Applying rust protection

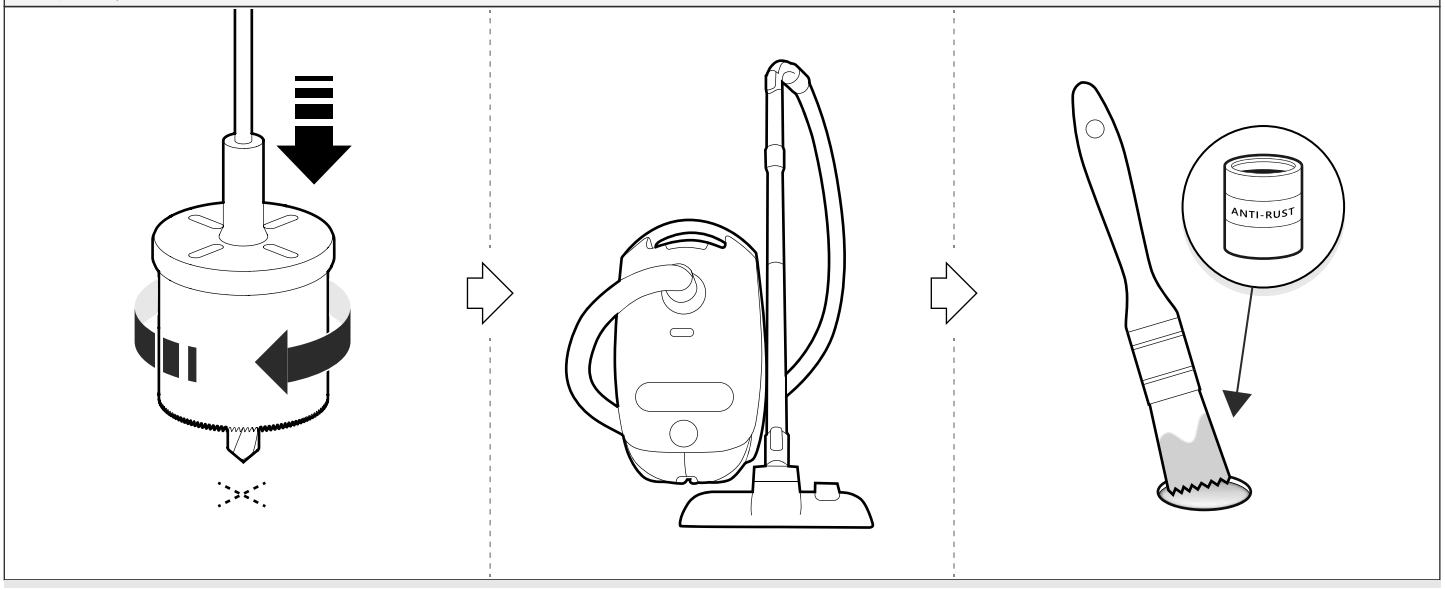

1

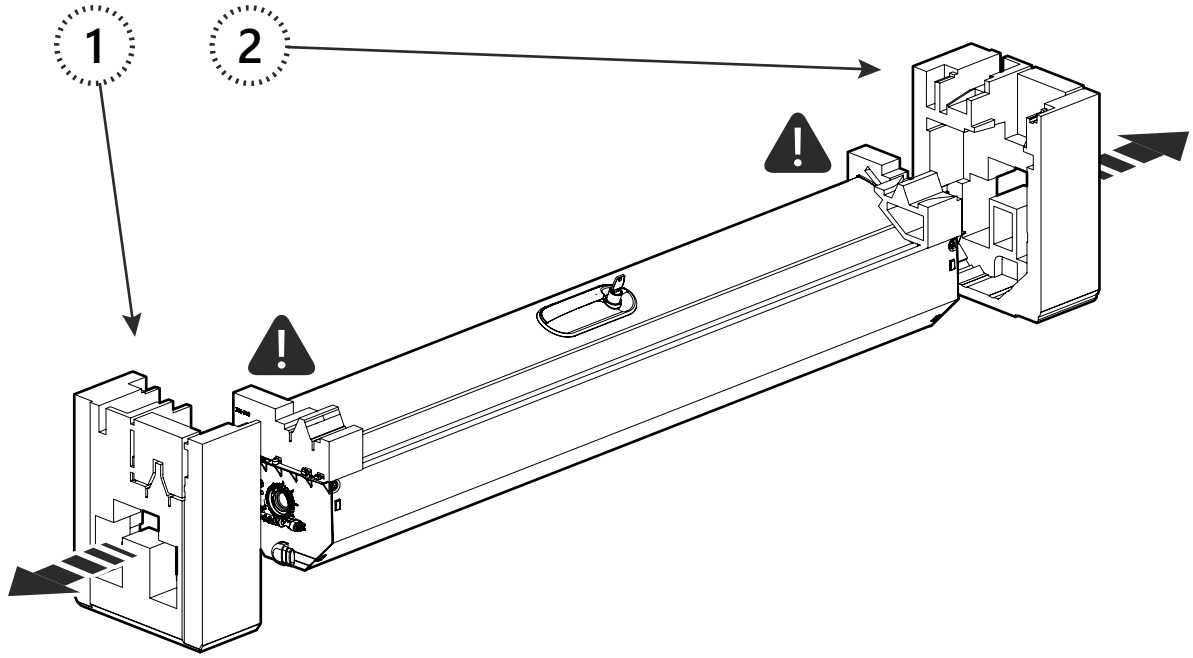

2

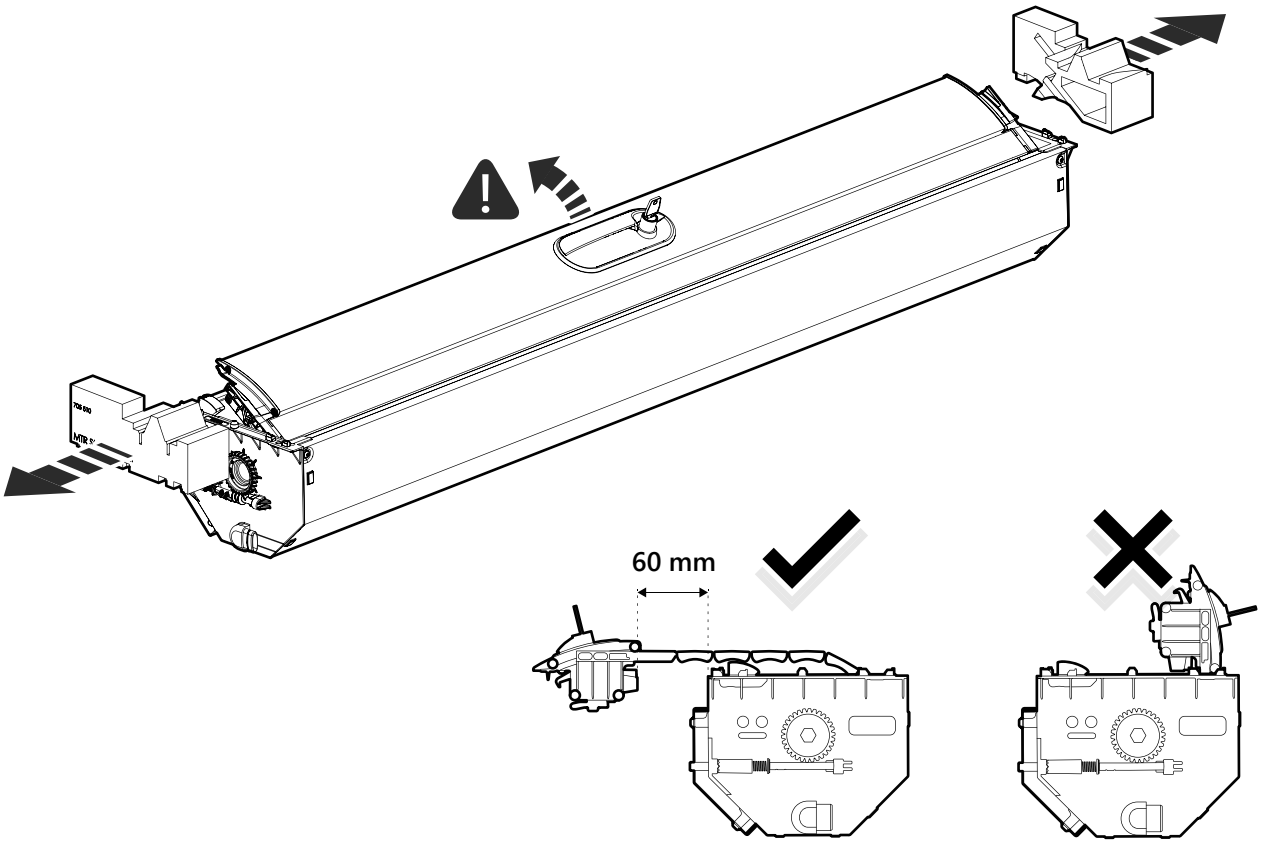

3

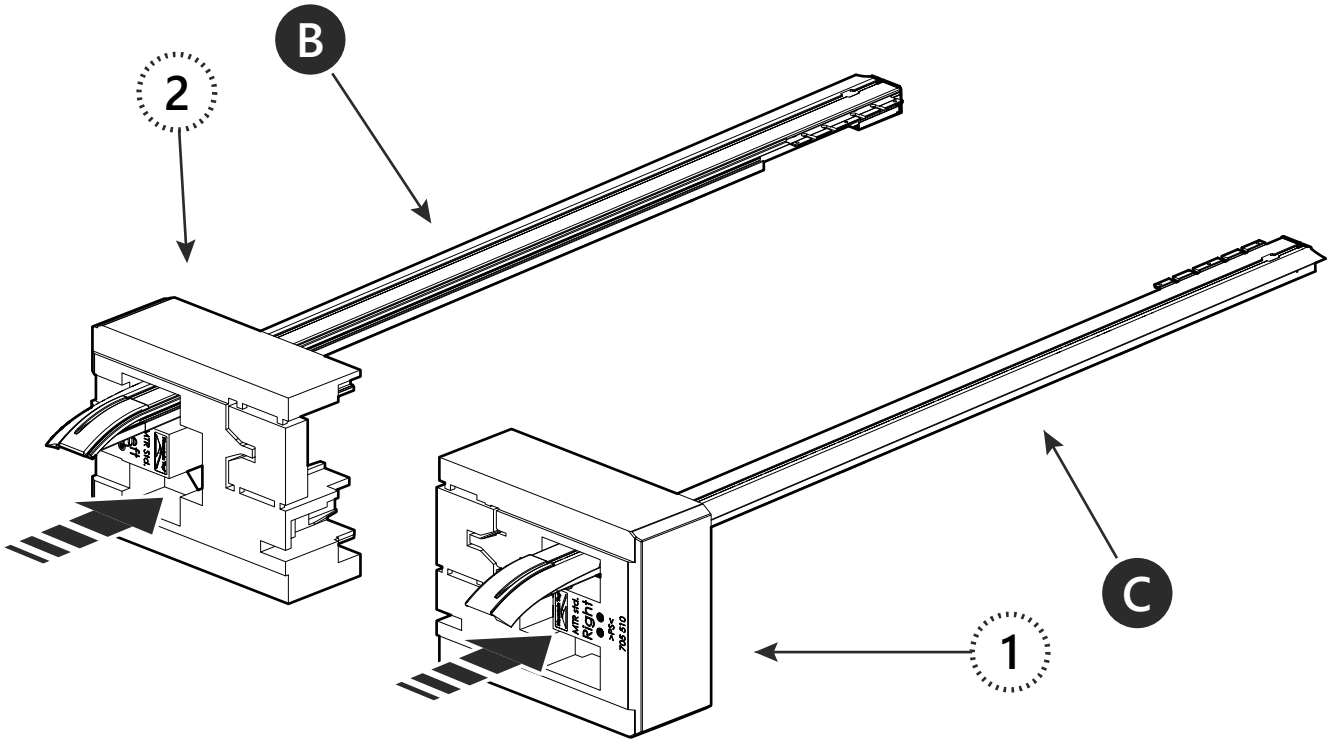

4

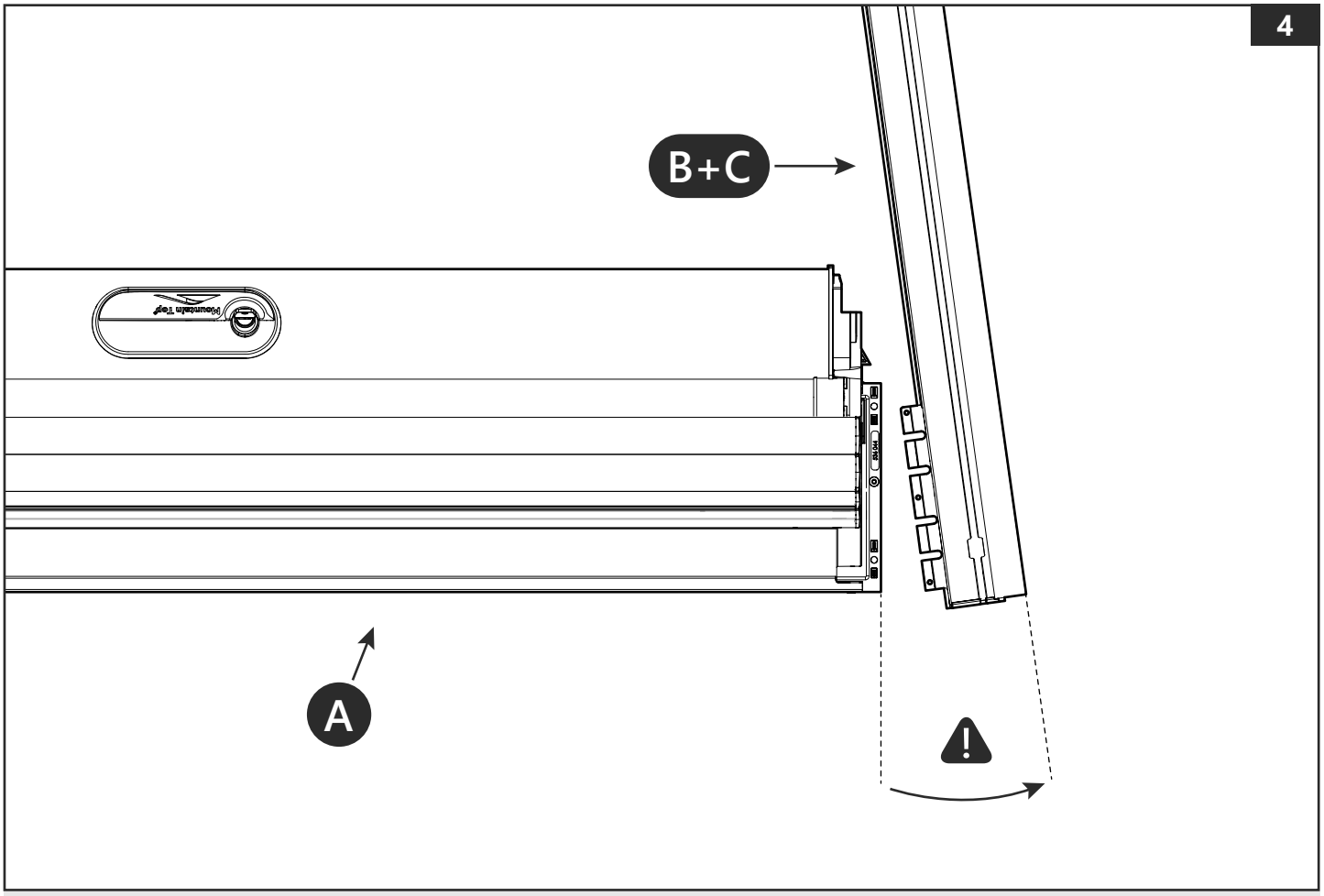

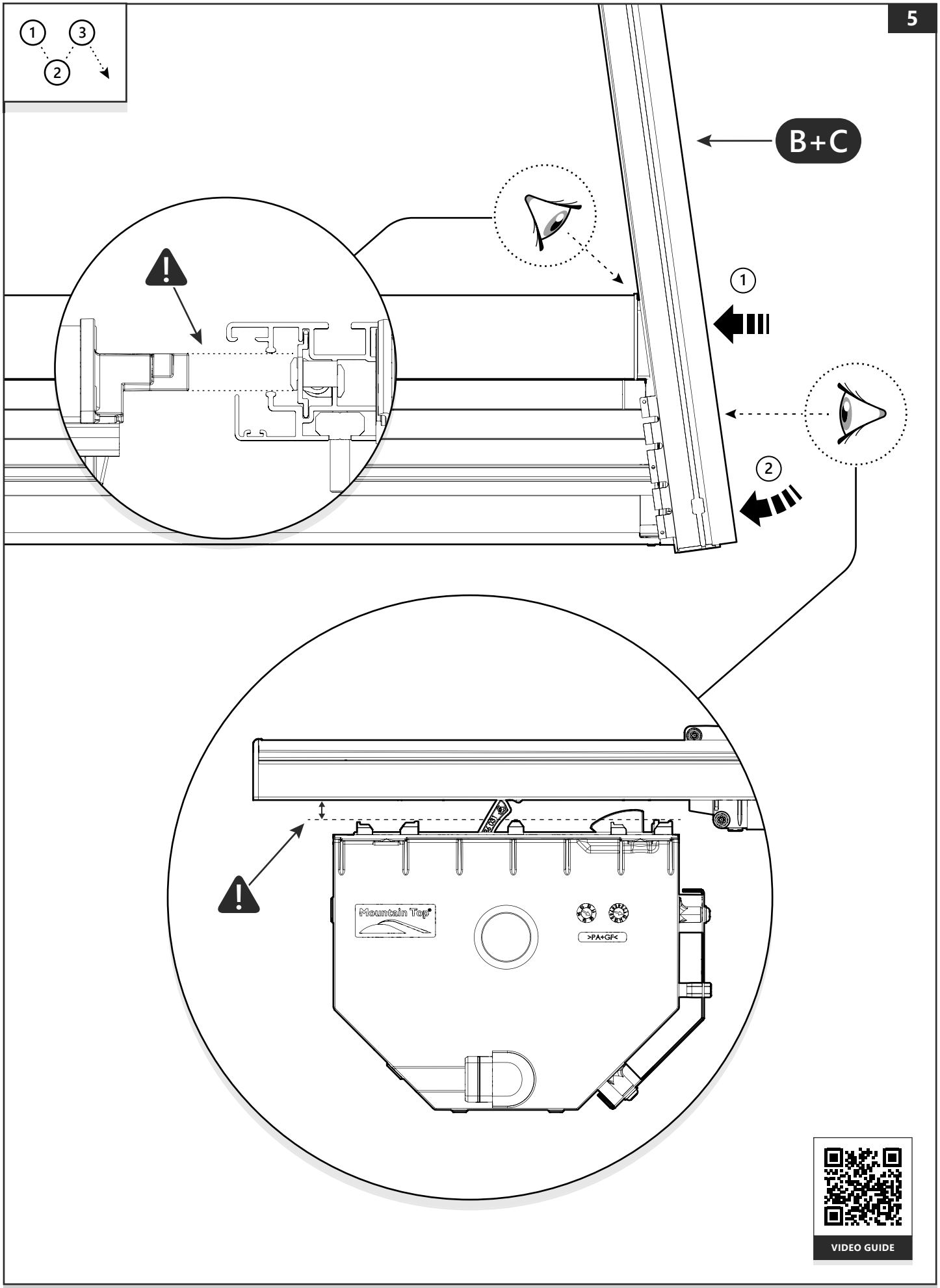
1
3
2
B+C
1
2
Mountain Top
>PA+GF<
VIDEO GUIDE

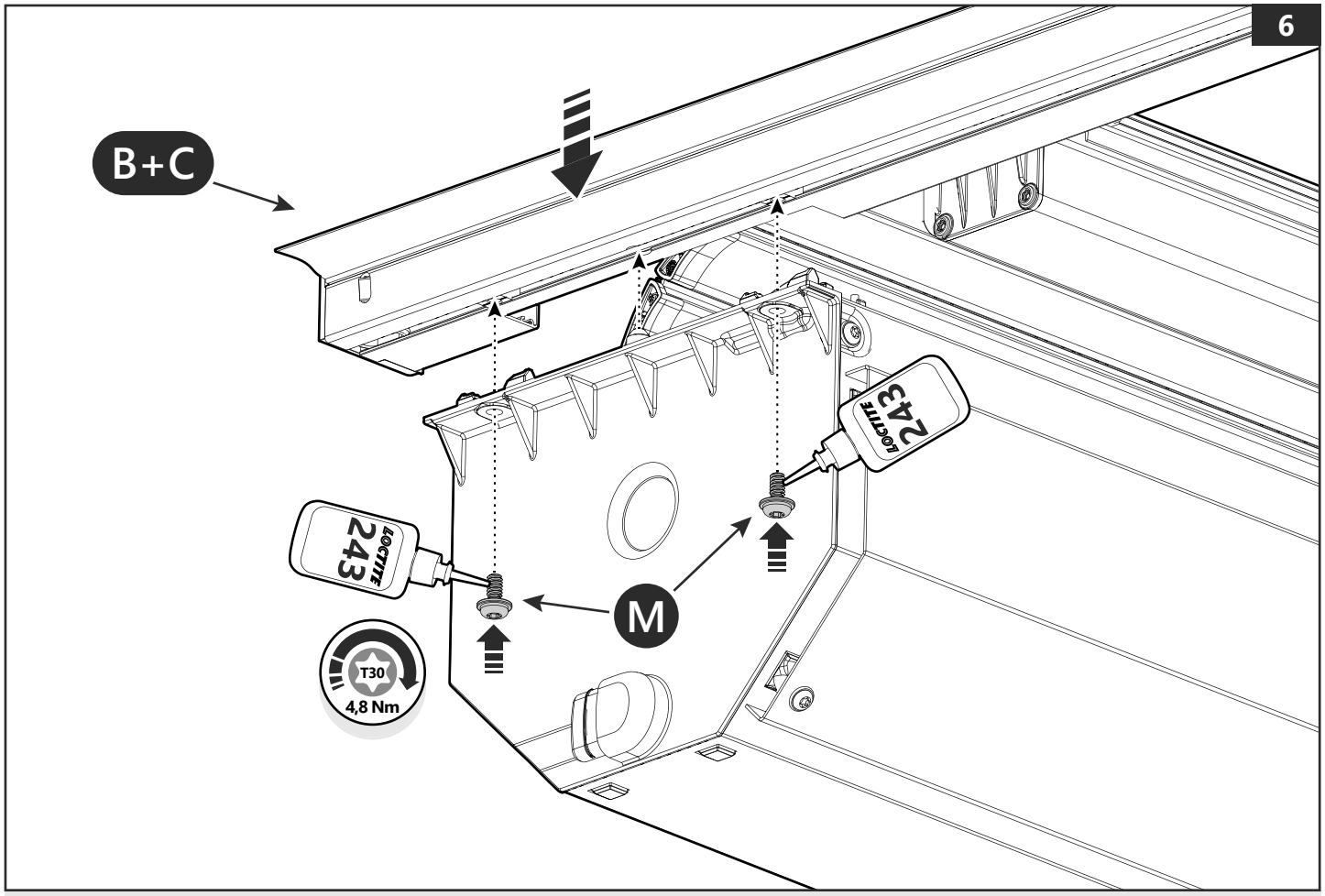
6
B+C
LOCTITE 243
LOCTITE 243
M
T30
4,8 Nm

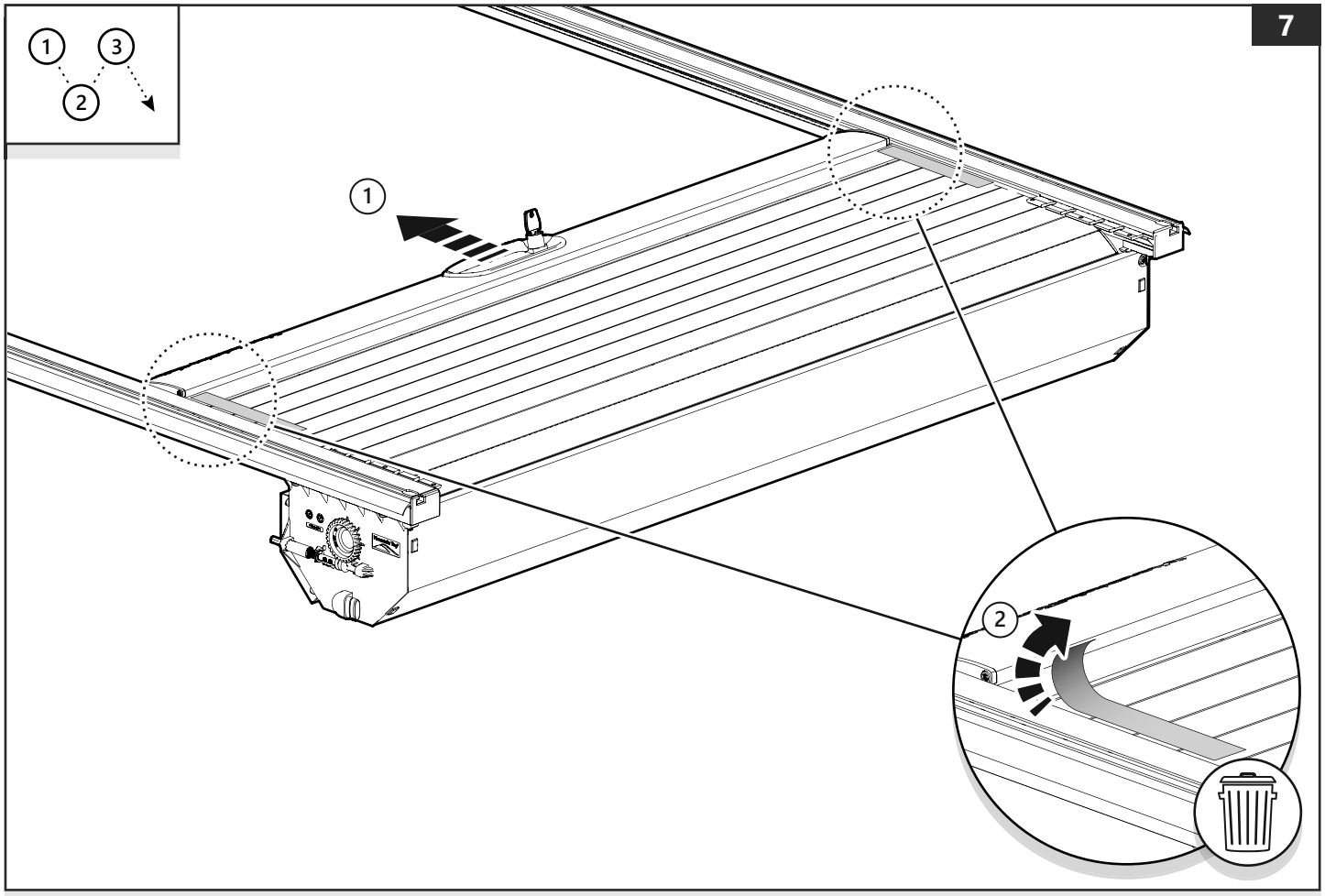
7
1
3
2
1
2

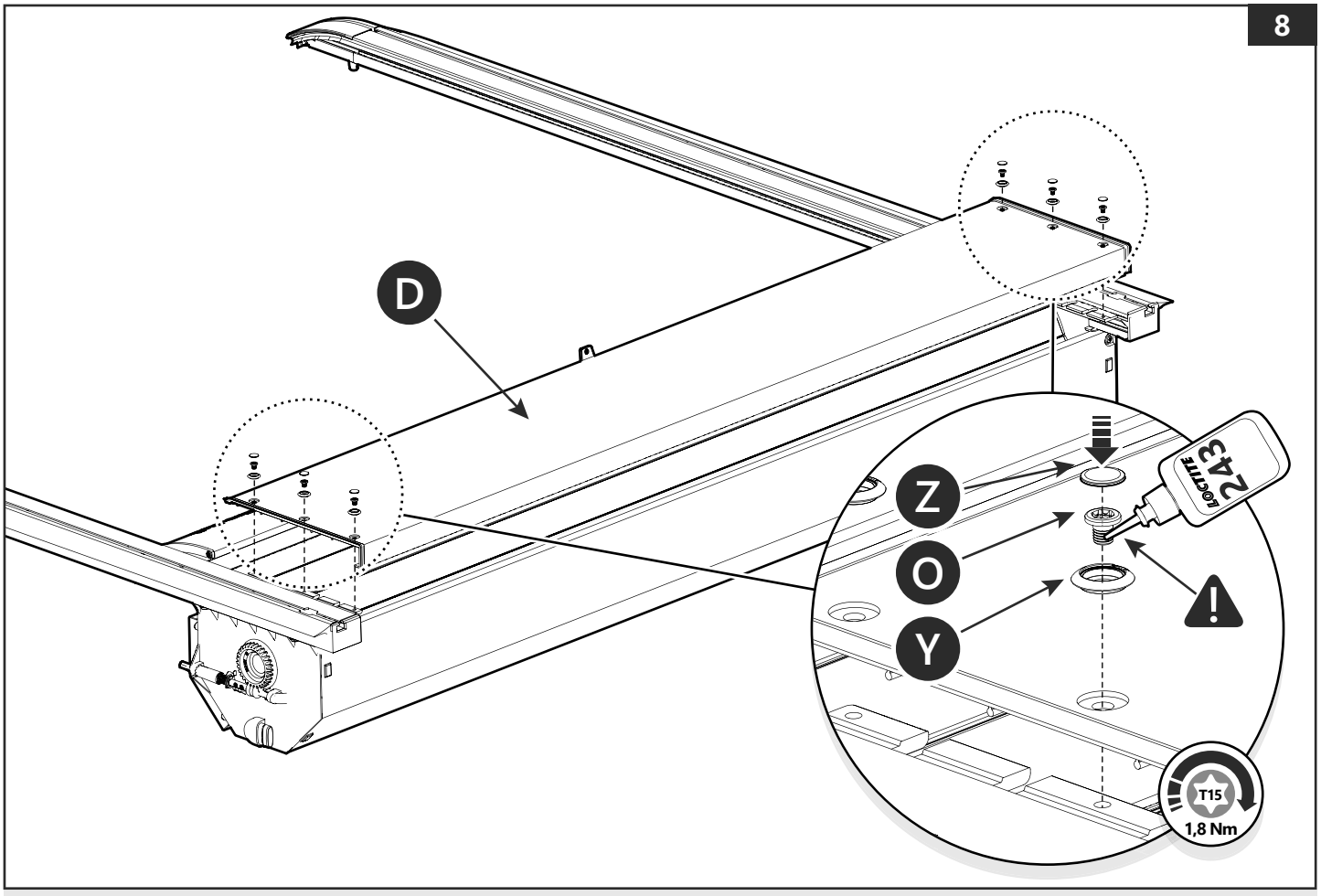
8
D
Z
O
Y
LOCTITE 243
T15
1,8 Nm

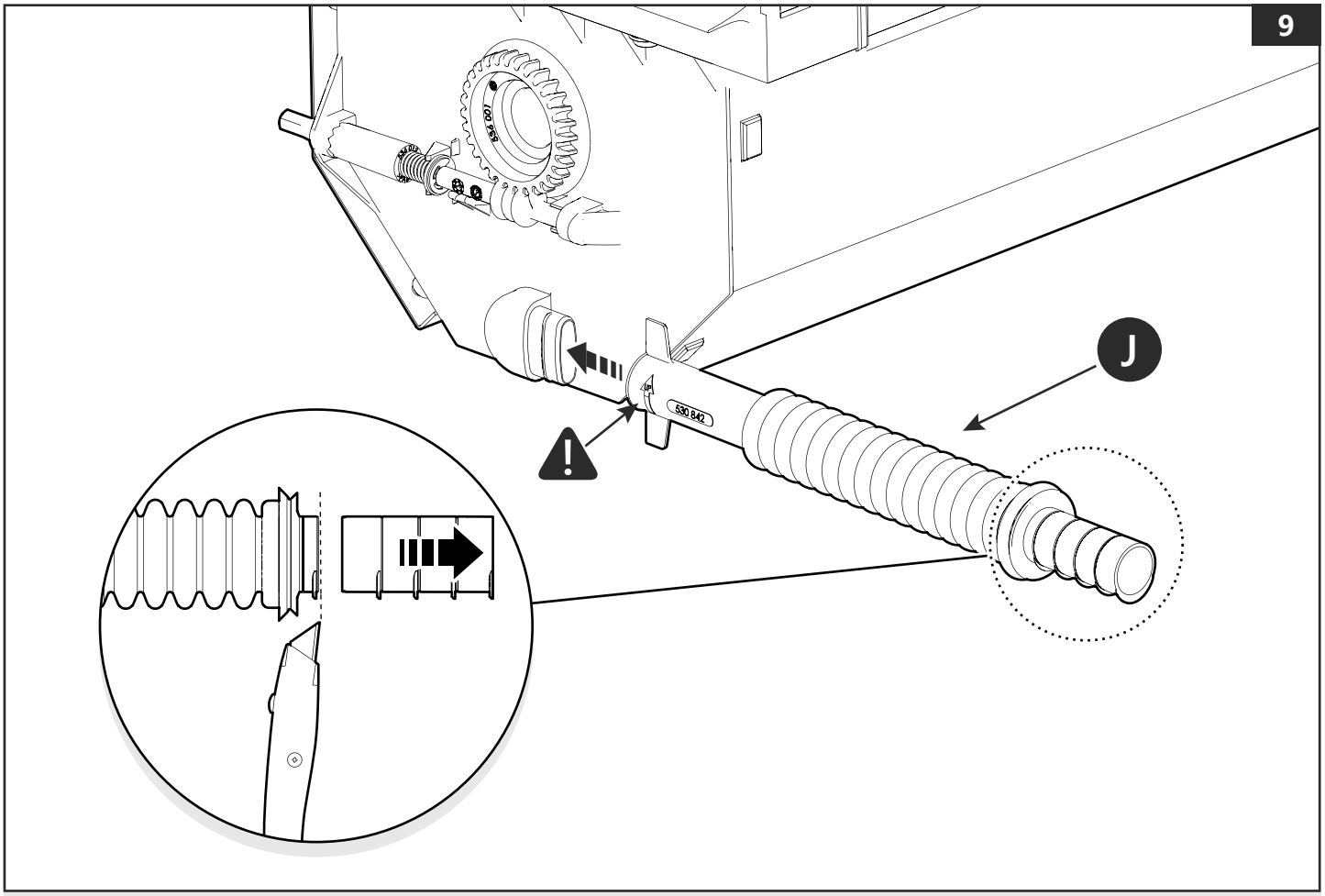
9
J

10

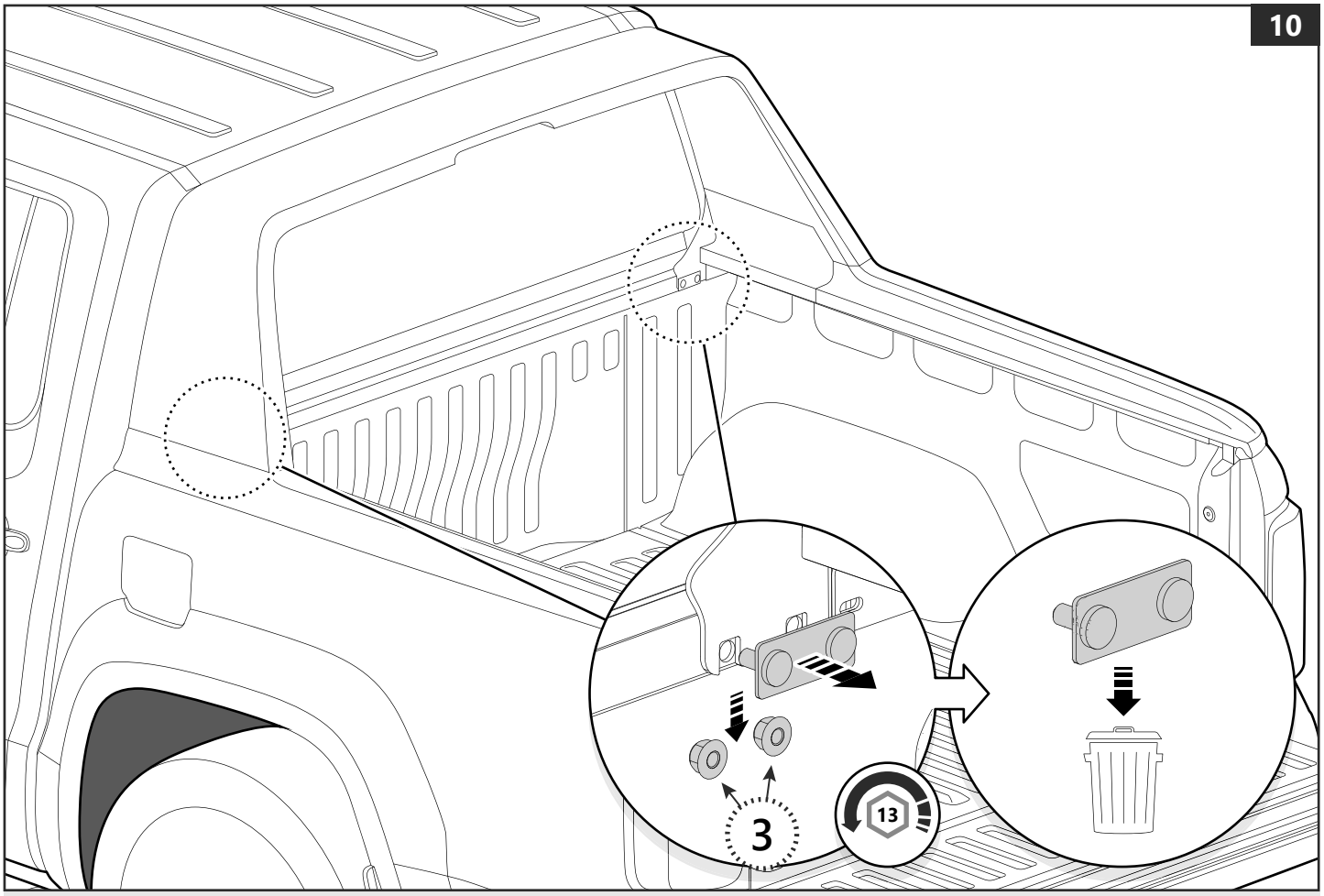

11

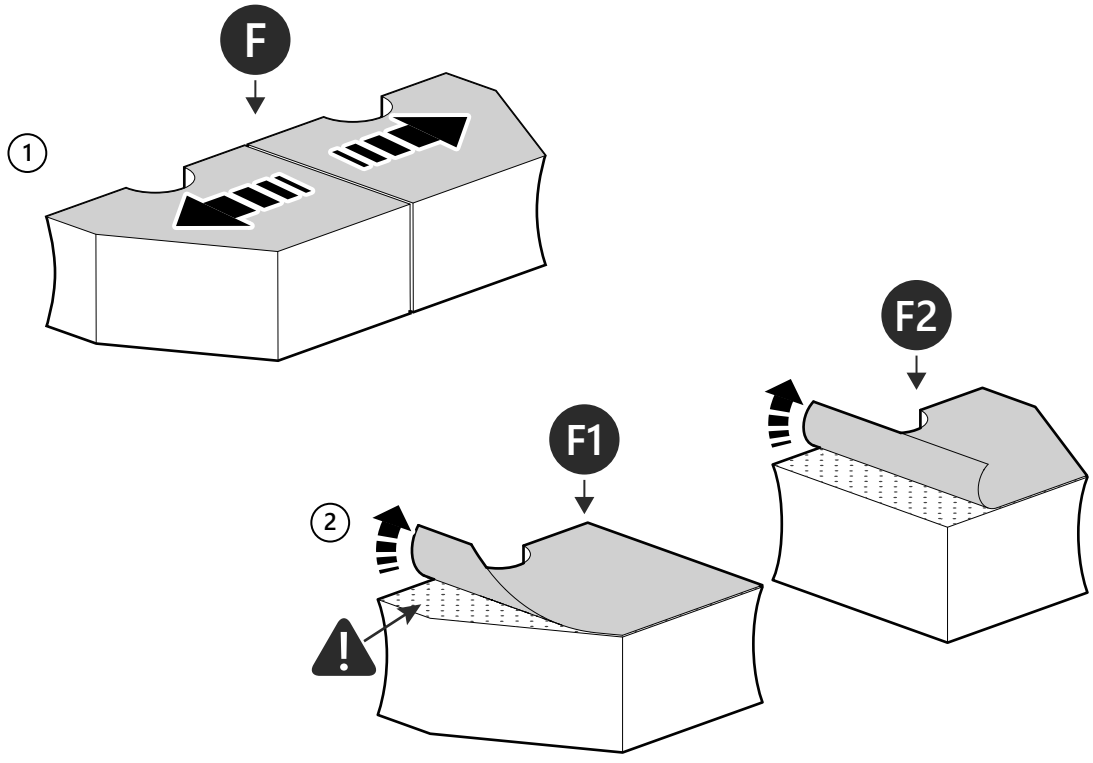

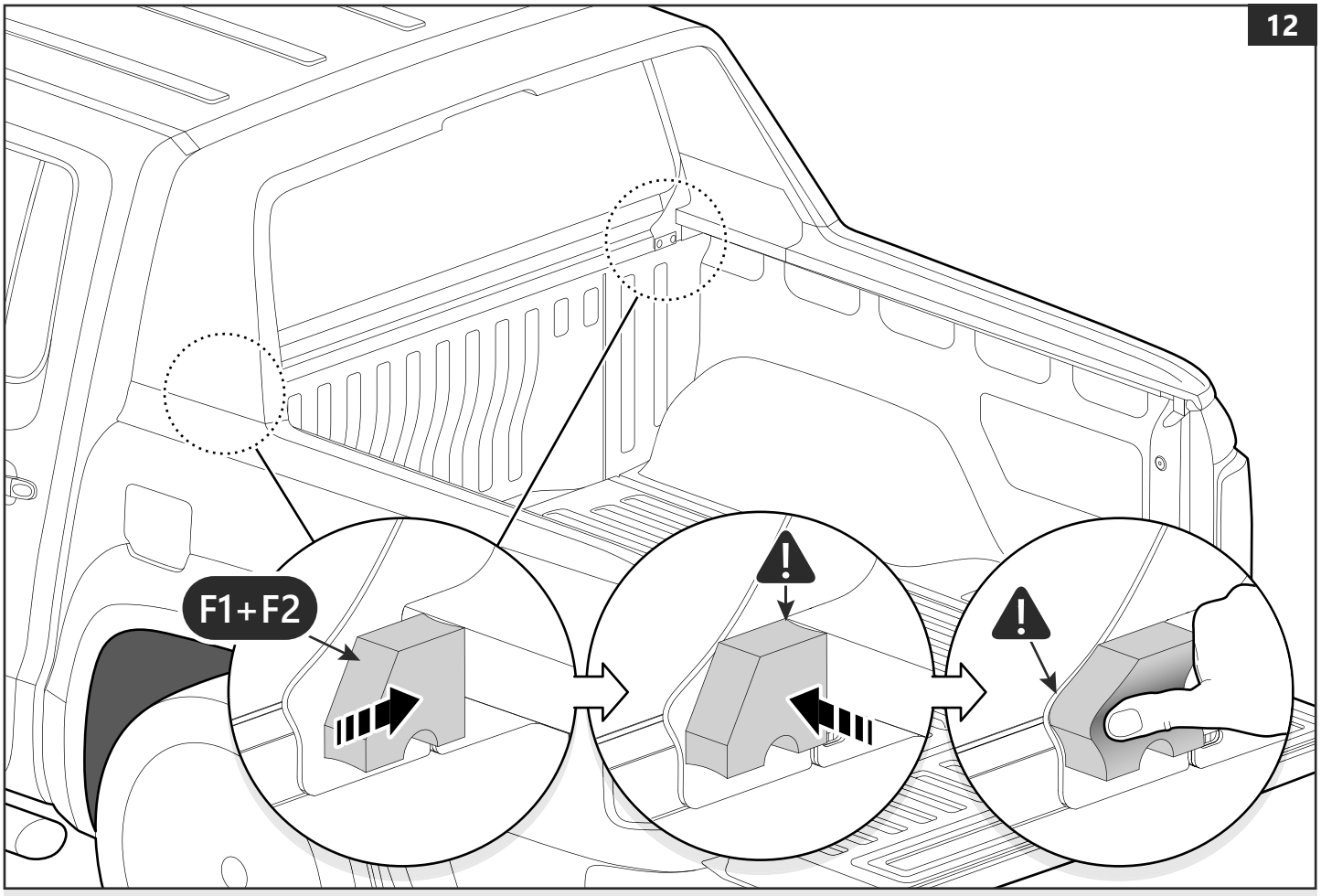
12
F1+F2

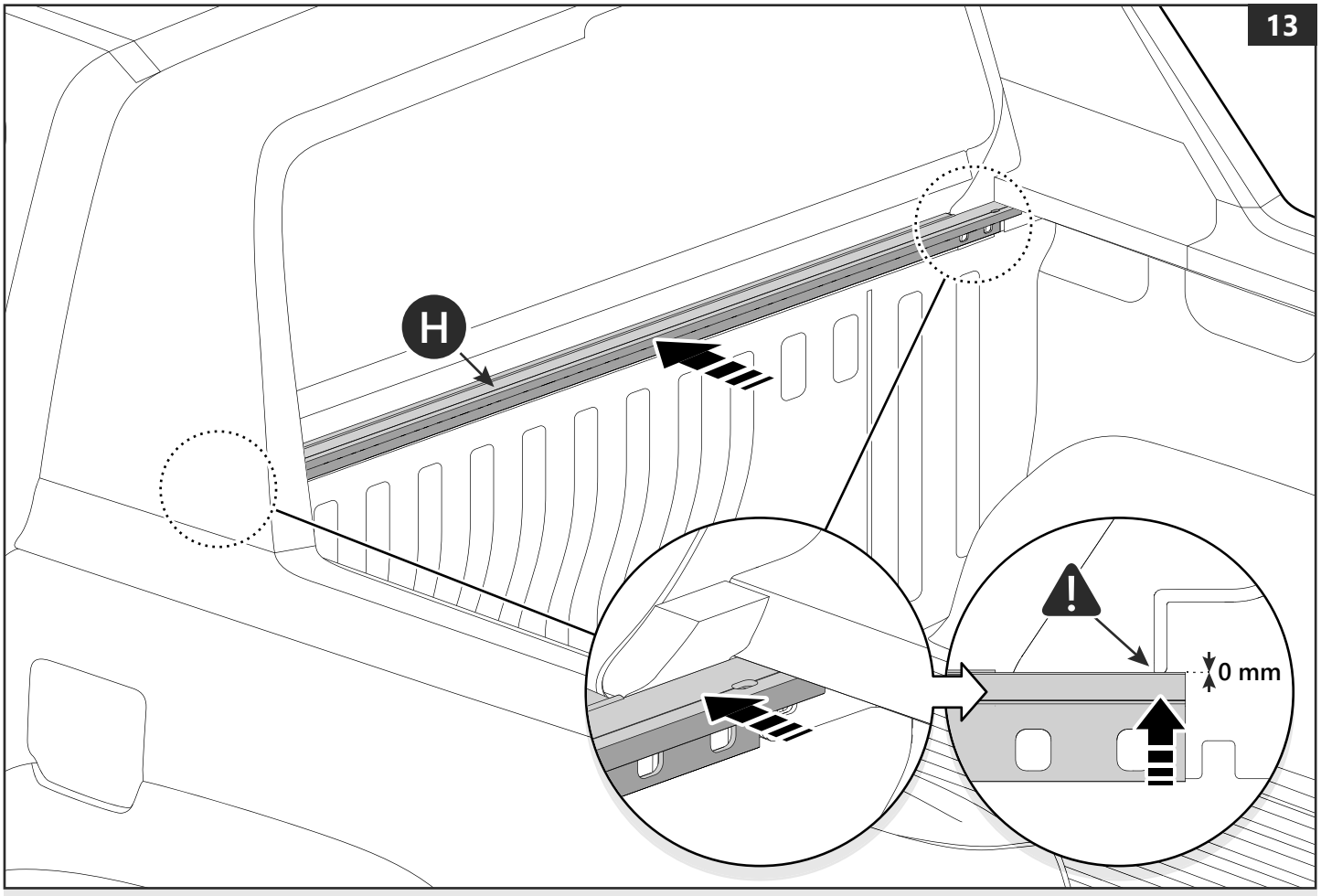
13
H
0 mm

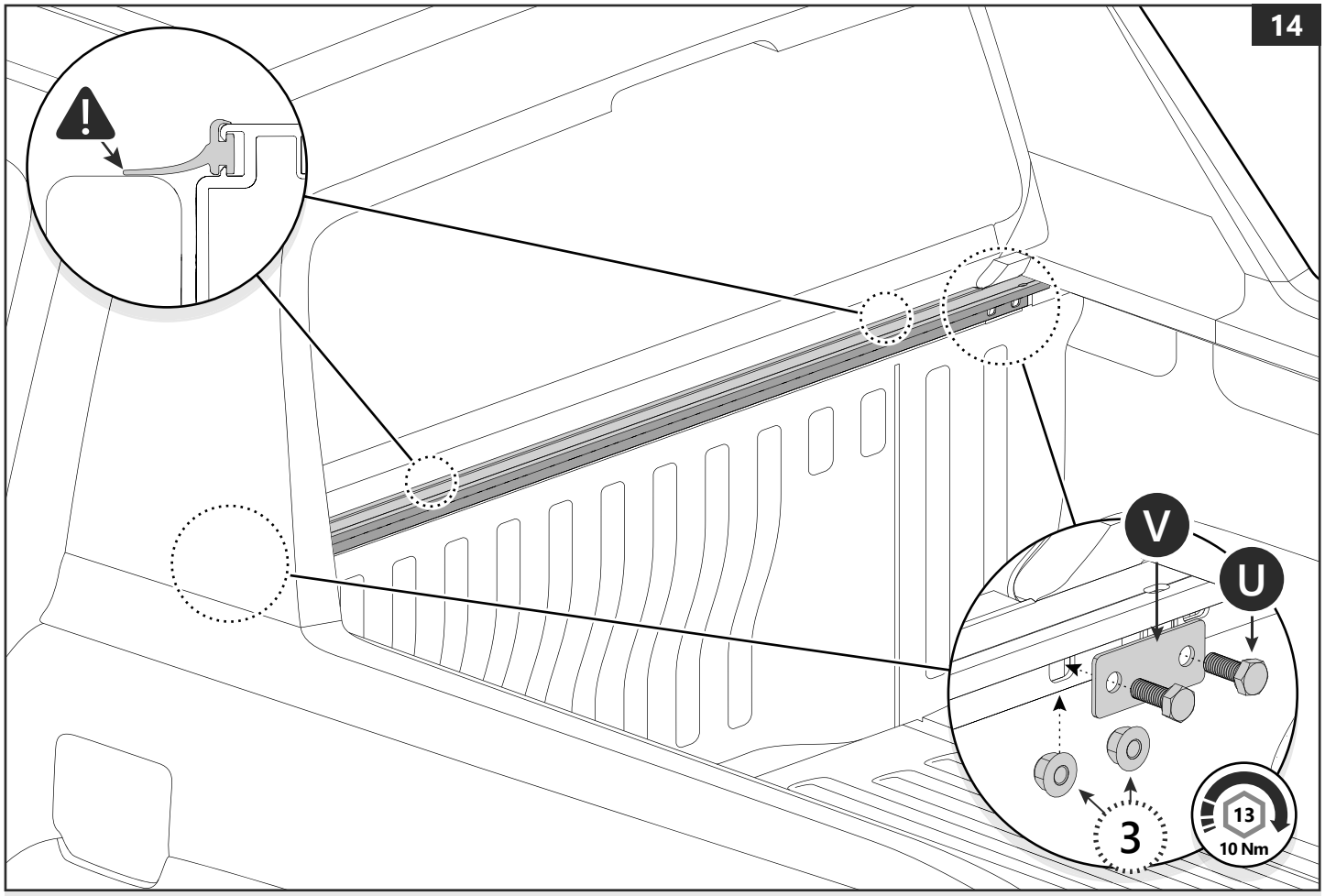
14
V
U
3
13
10 Nm

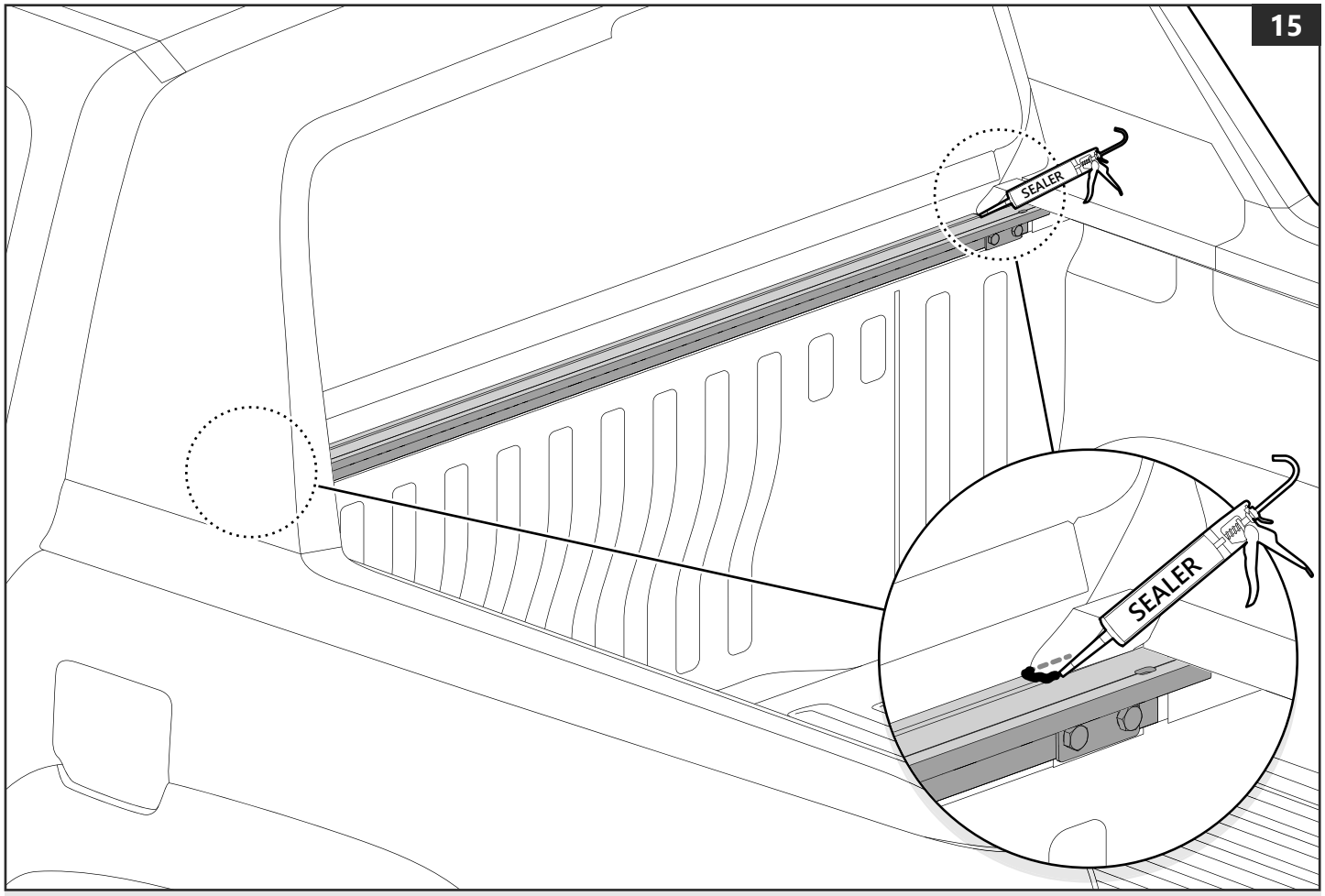
15
SEALER
SEALER

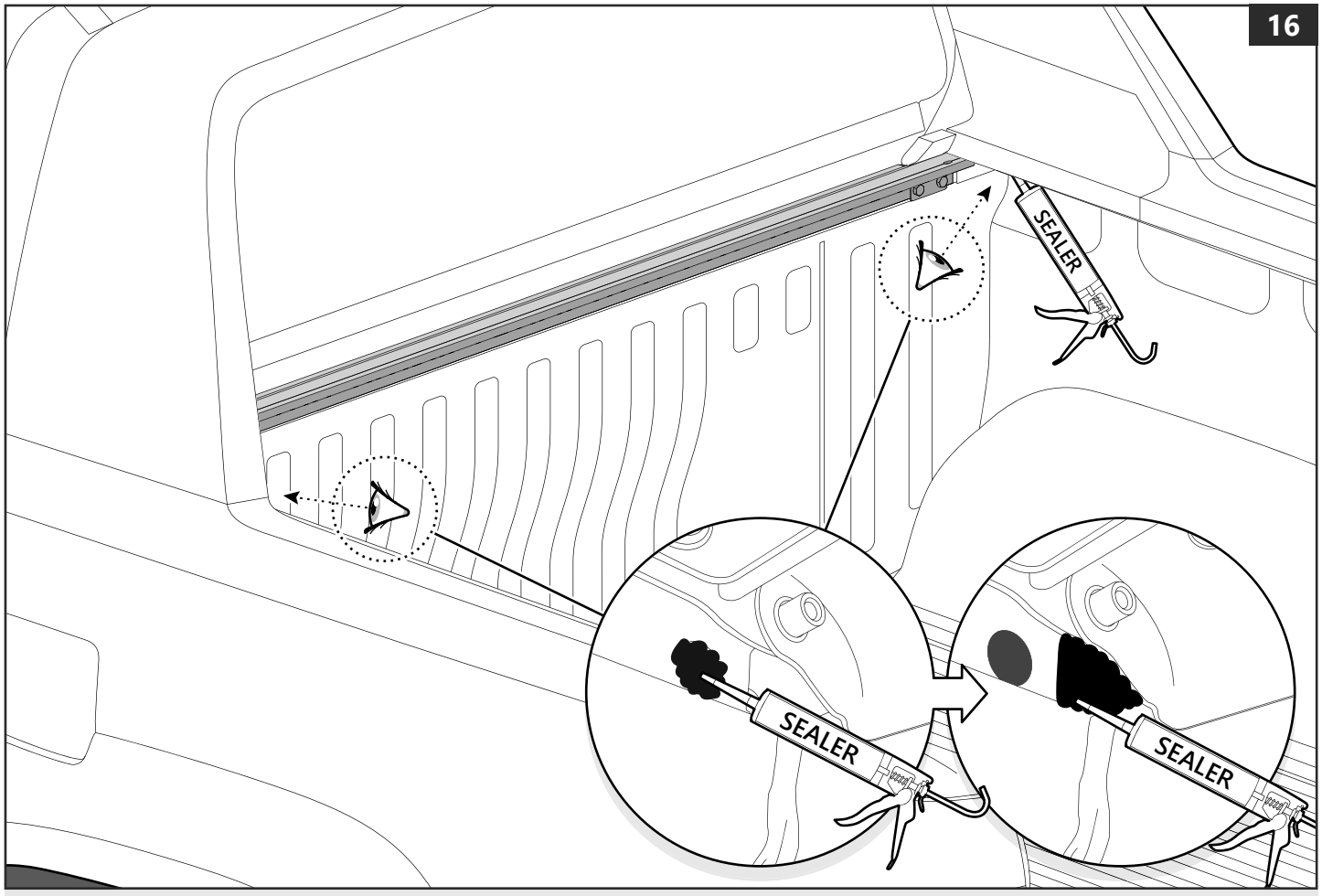
16
SEALER
SEALER
SEALER

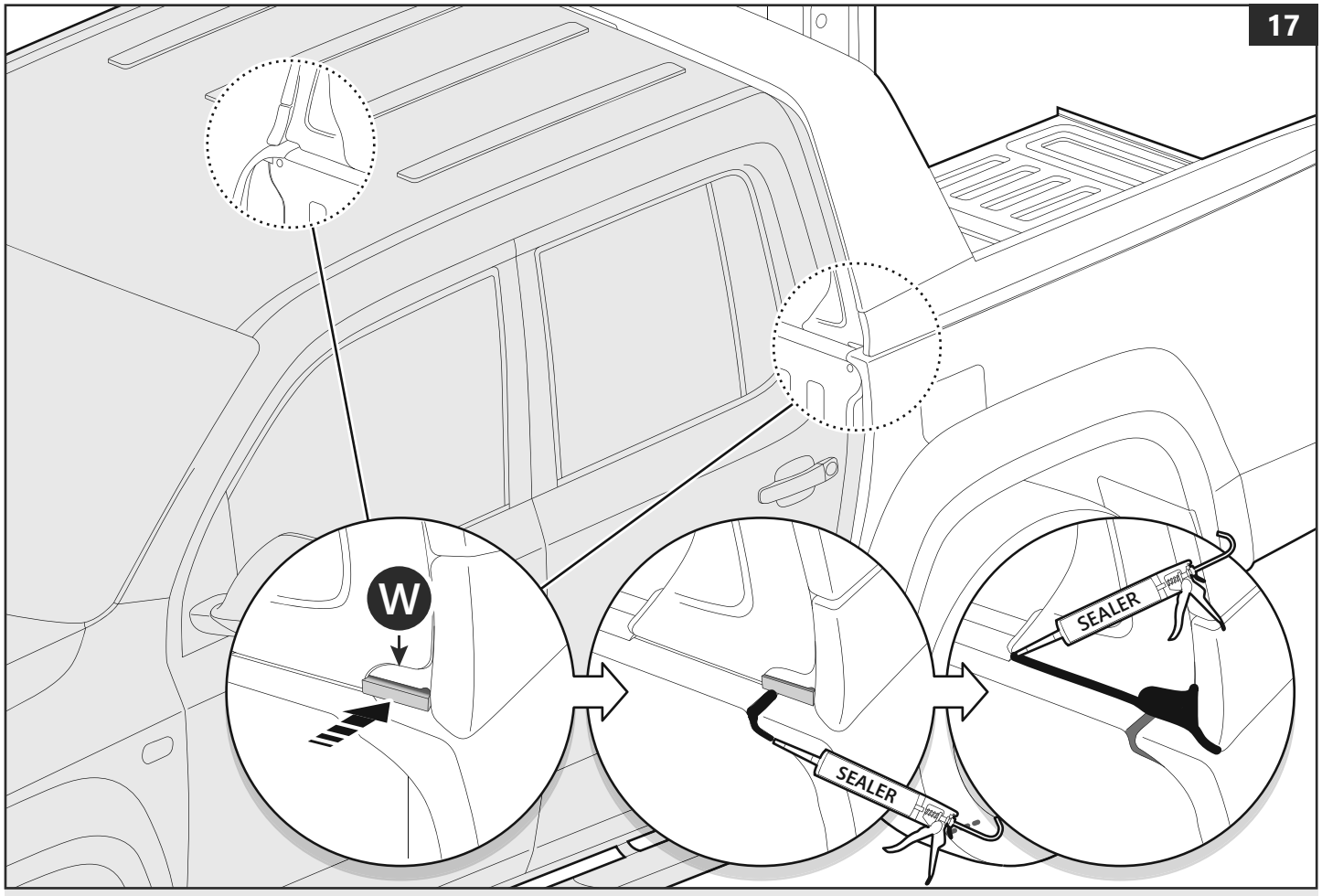
17
W
SEALER
SEALER

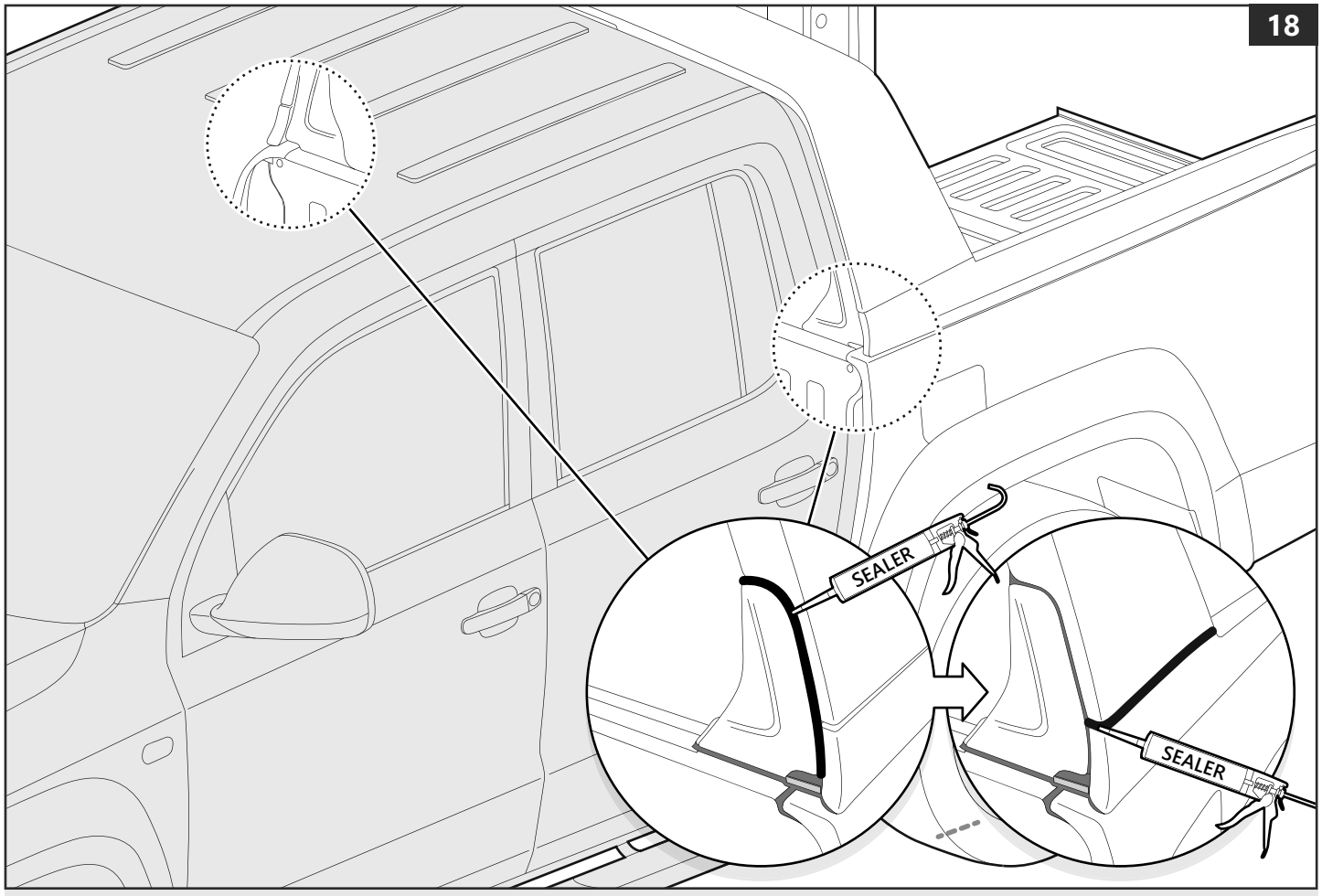
18
SEALER
SEALER

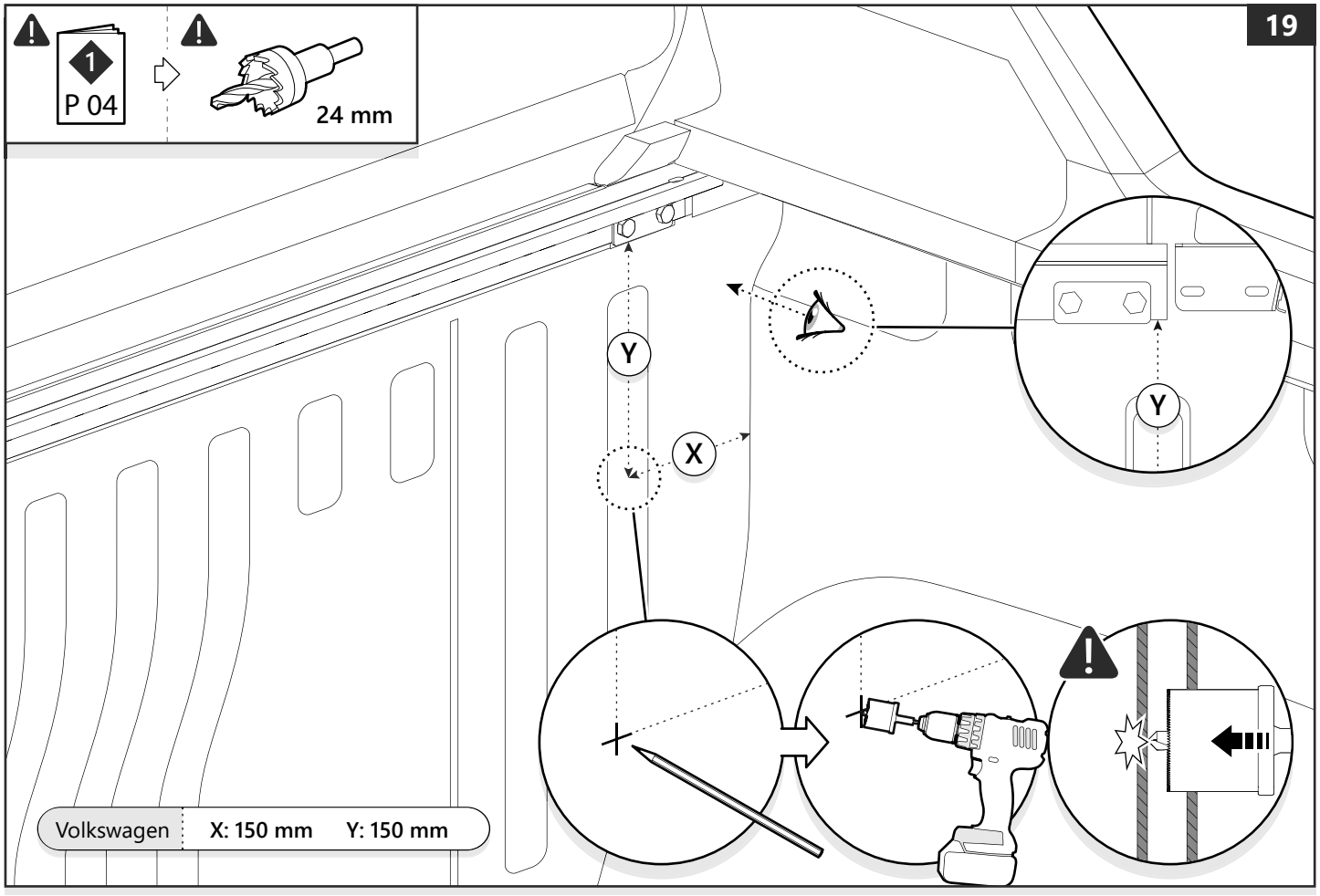
19
1
P 04
24 mm
Y
X
Y
Volkswagen
X: 150 mm
Y: 150 mm

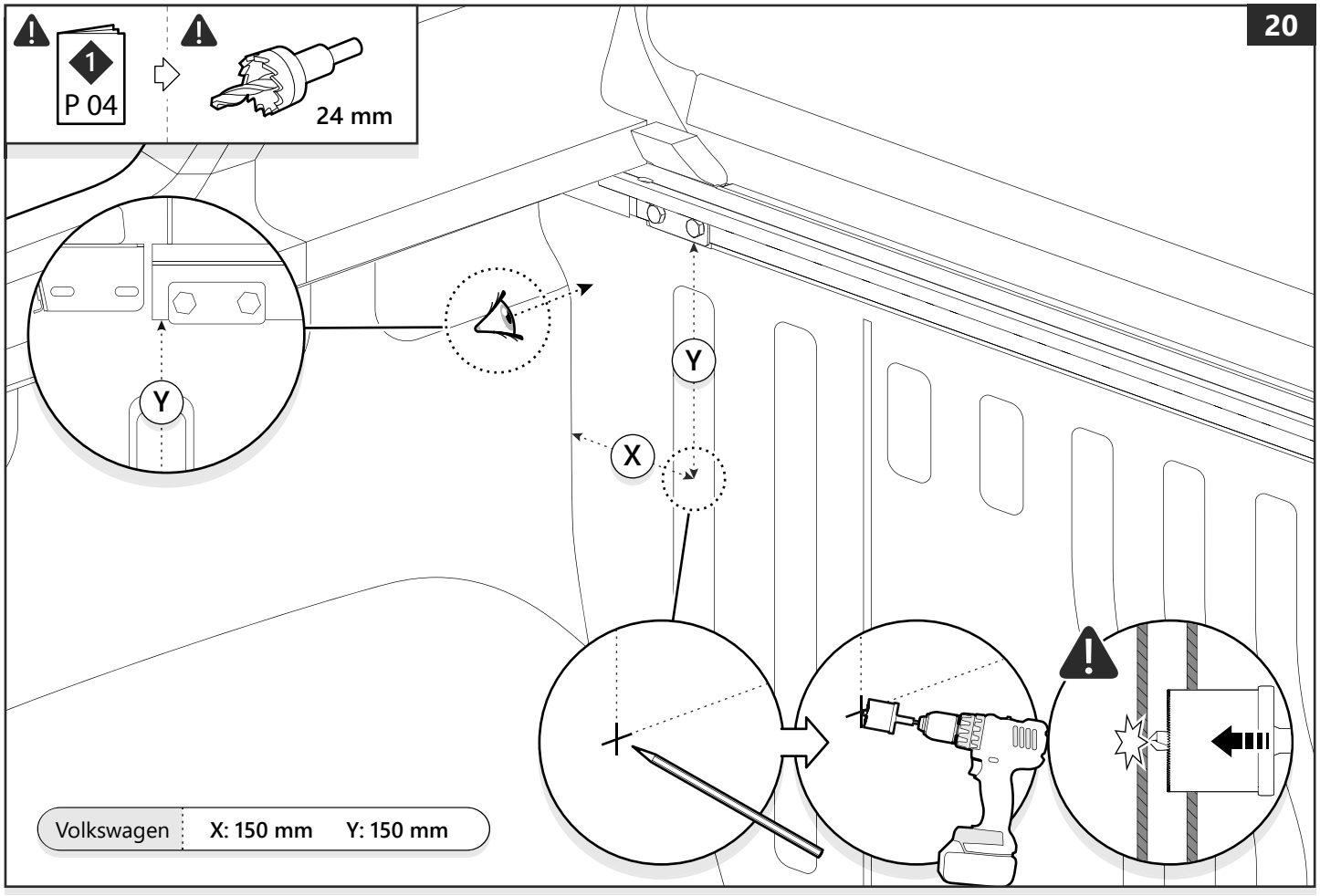
20
1
P 04
24 mm
Y
X
Y
Volkswagen
X: 150 mm
Y: 150 mm

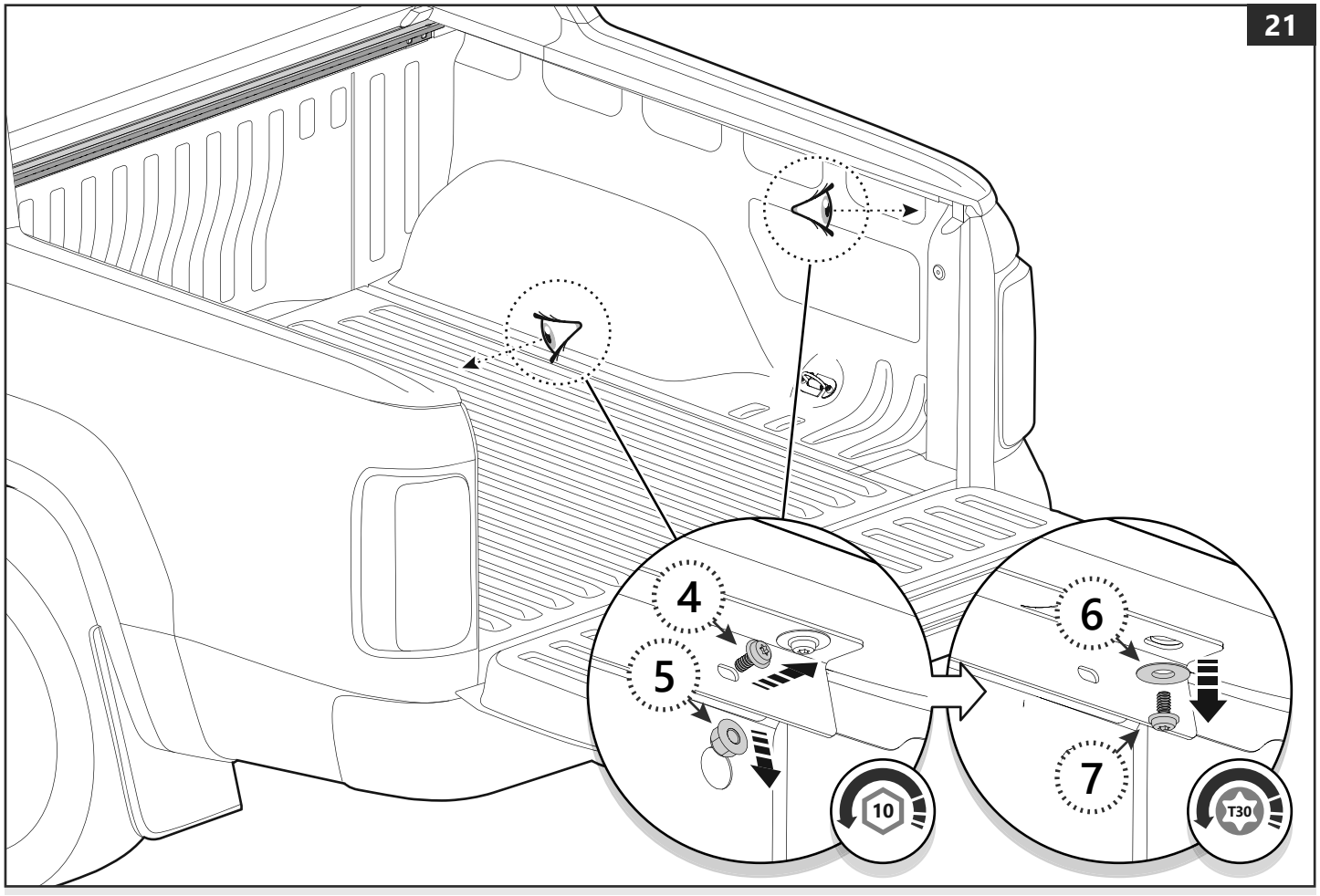
21
4
5
6
7
10
T30

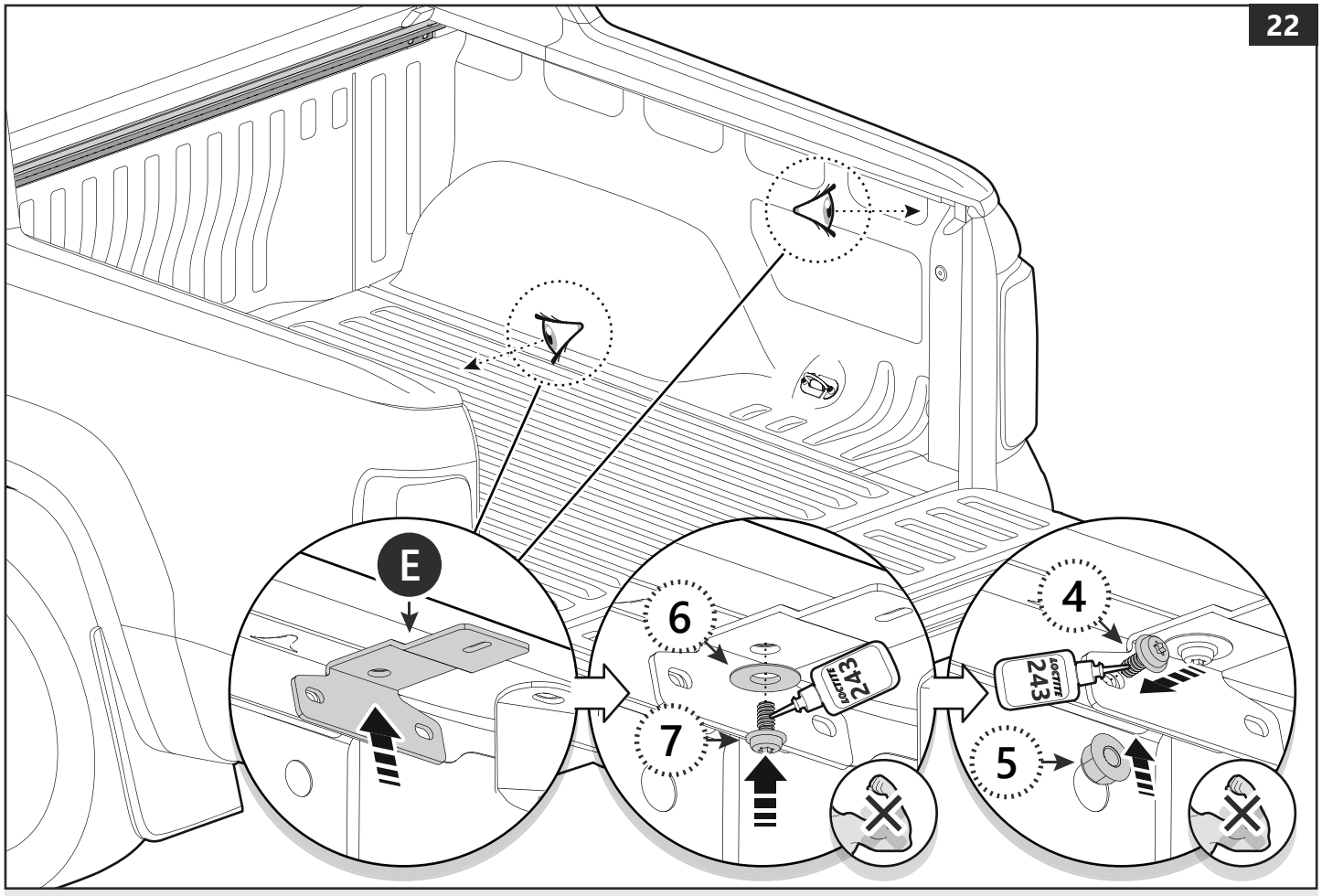
22
E
6
7
4
5
LOCTITE 243

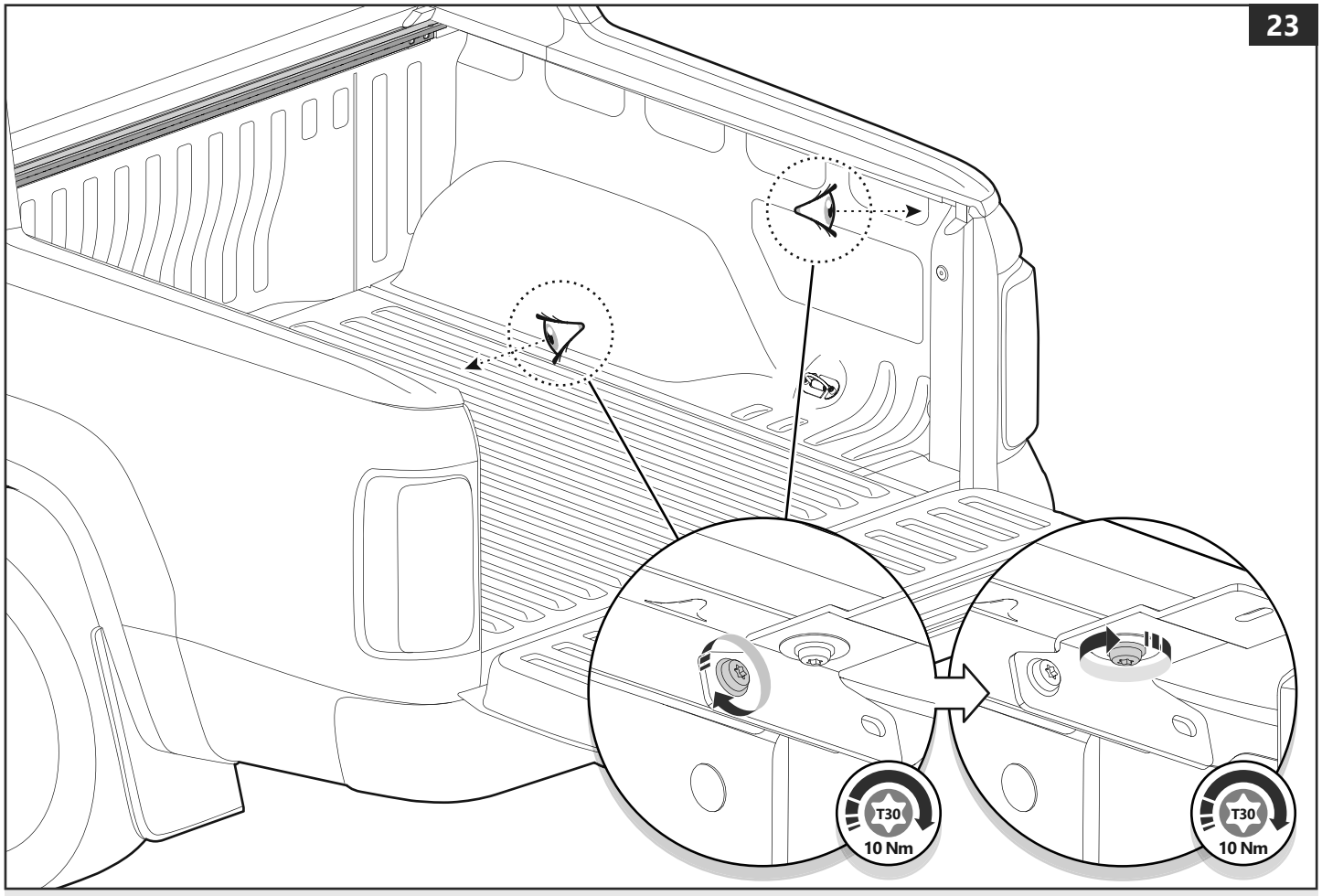
23
T30
10 Nm
T30
10 Nm

24

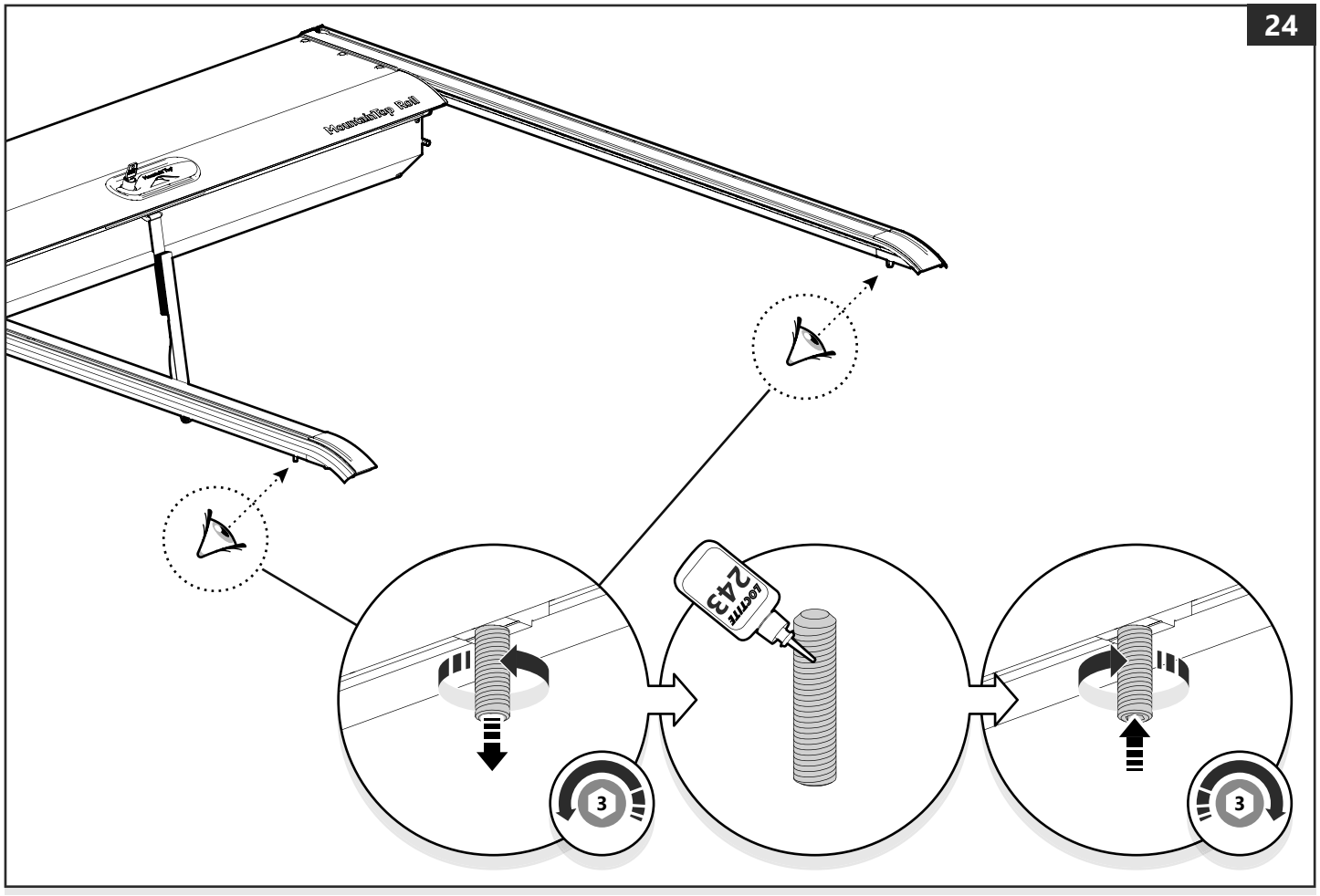

25

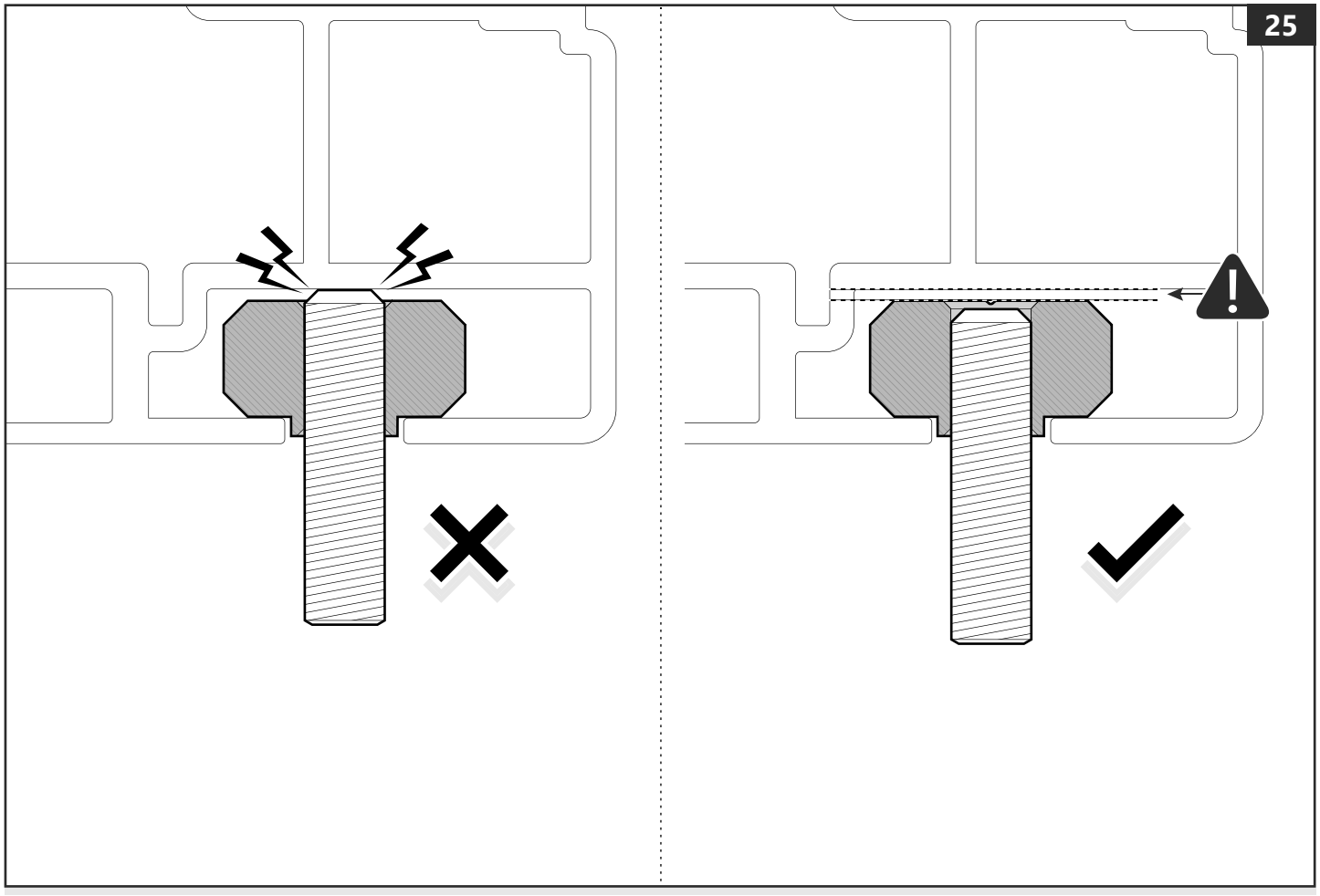

26

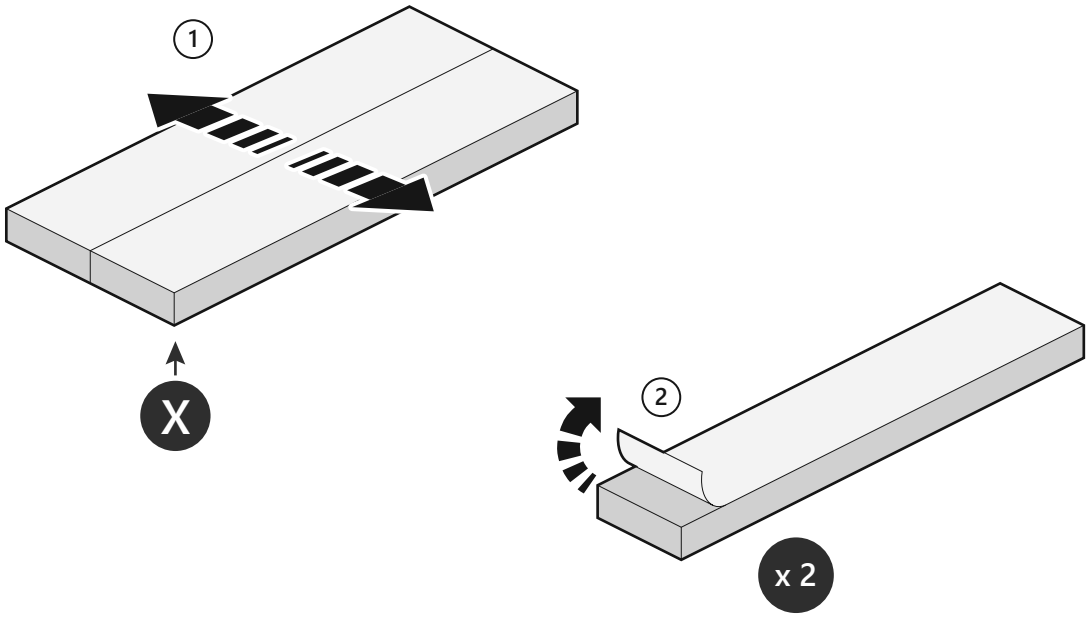

27

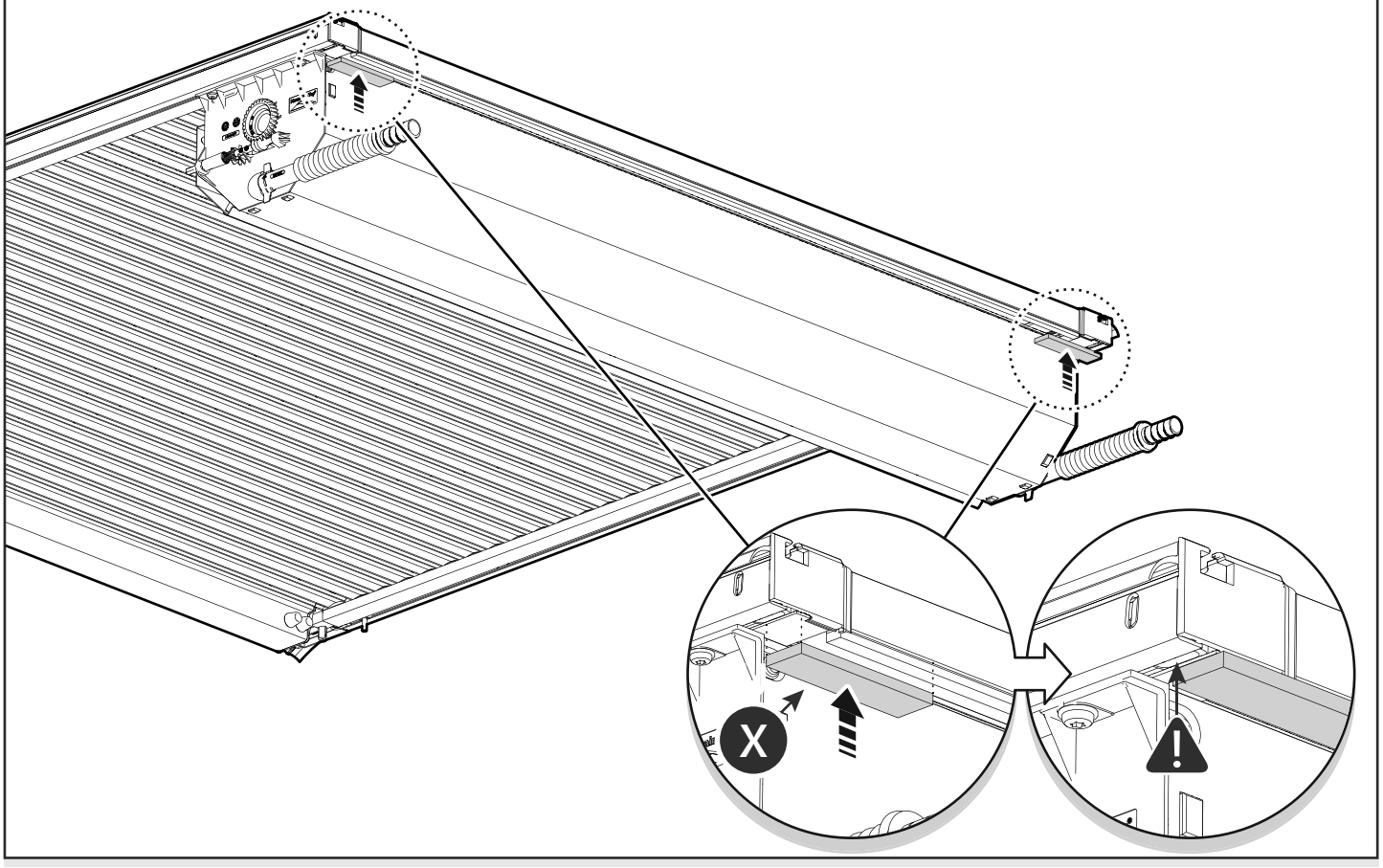

28

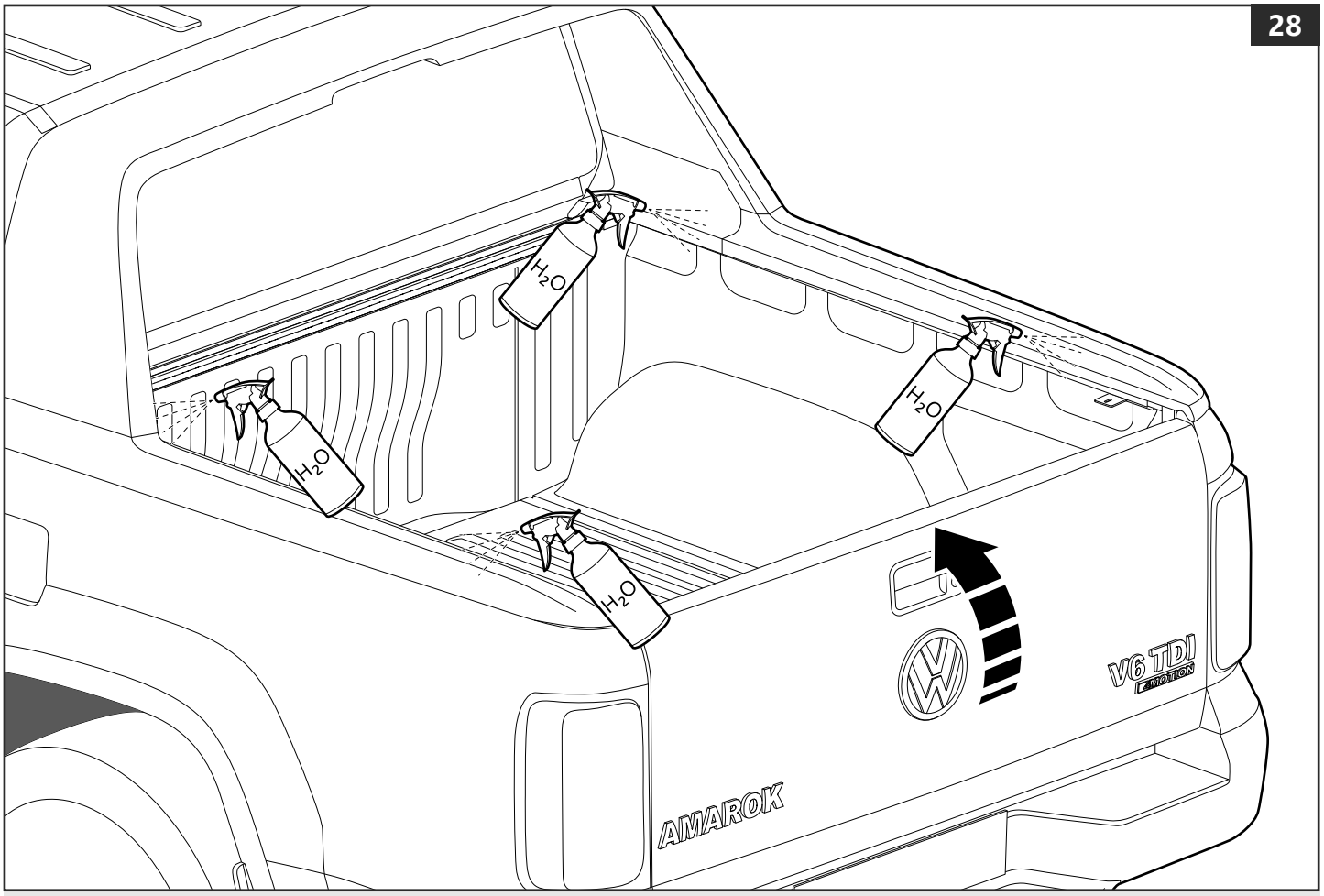

29

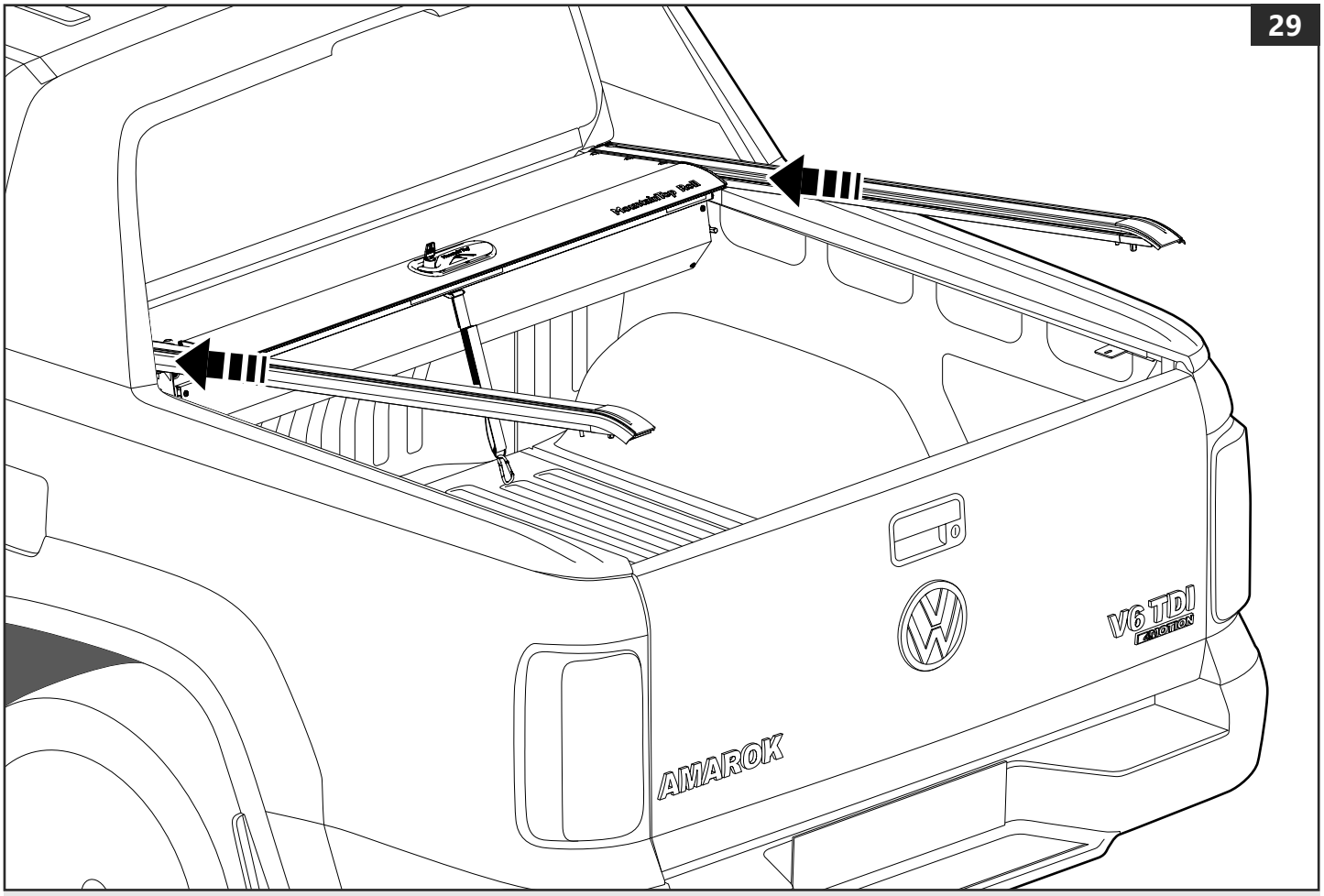

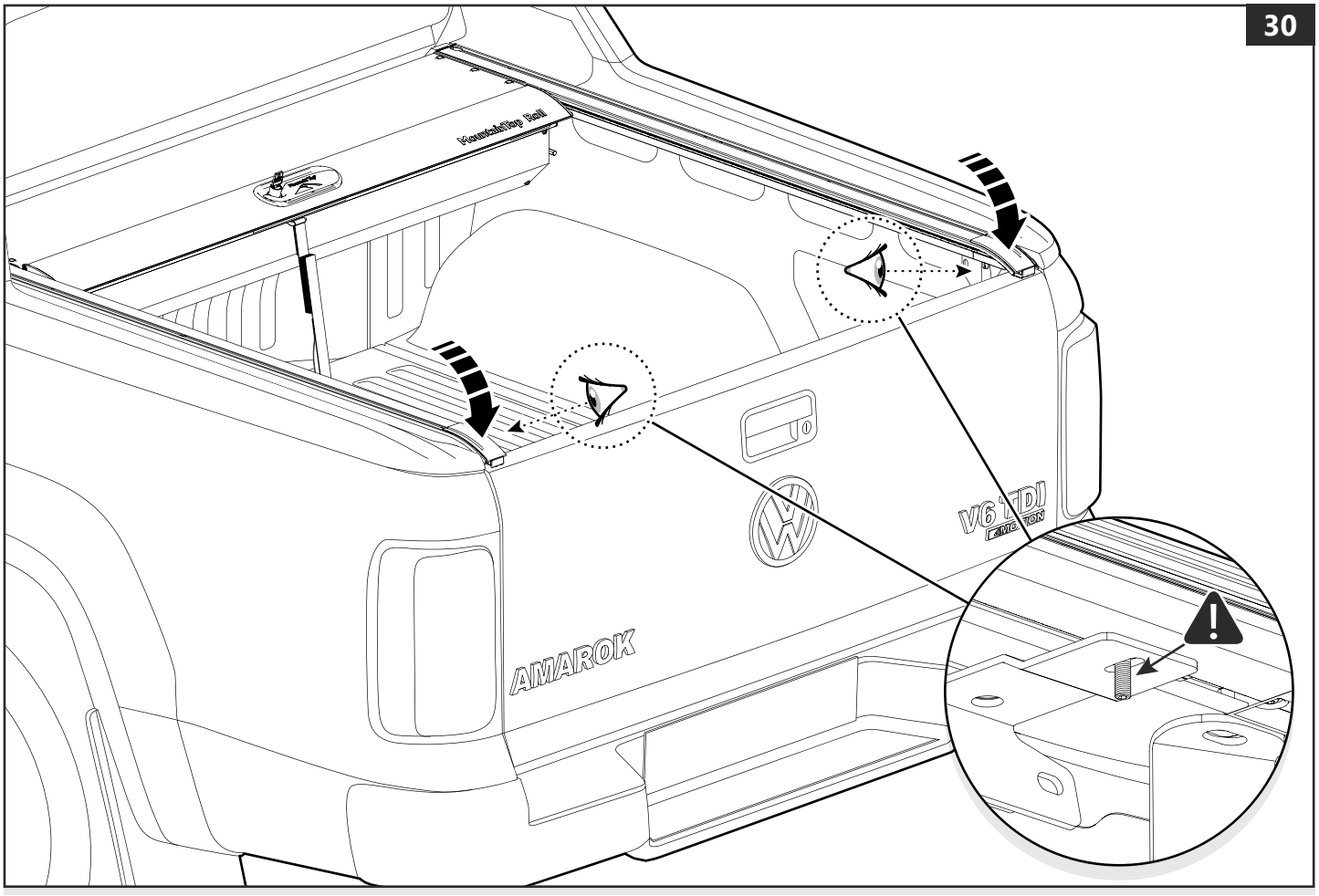
30
AMAROK
V6 TDI
4MOTION

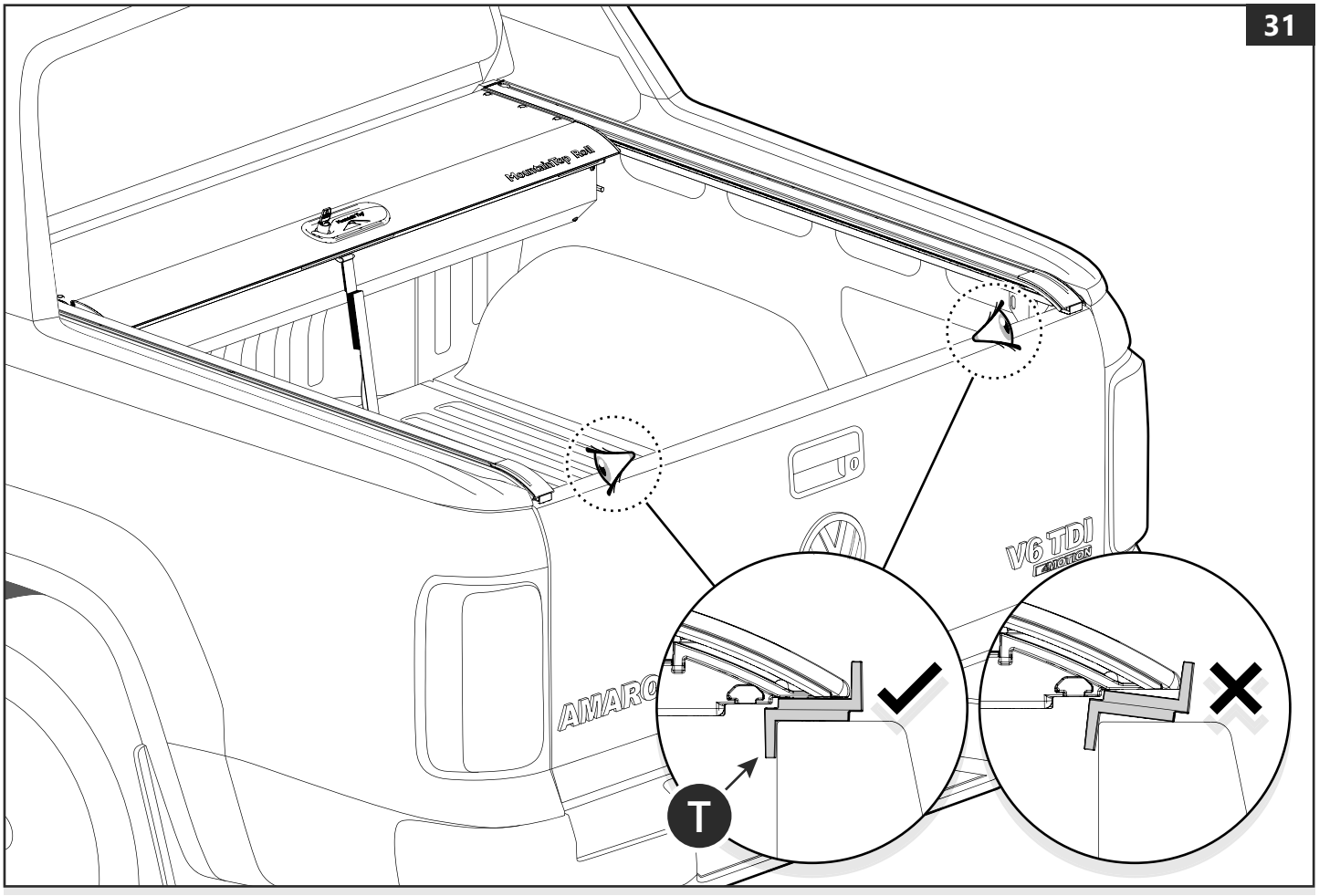
31
T
V6 TDI
4MOTION

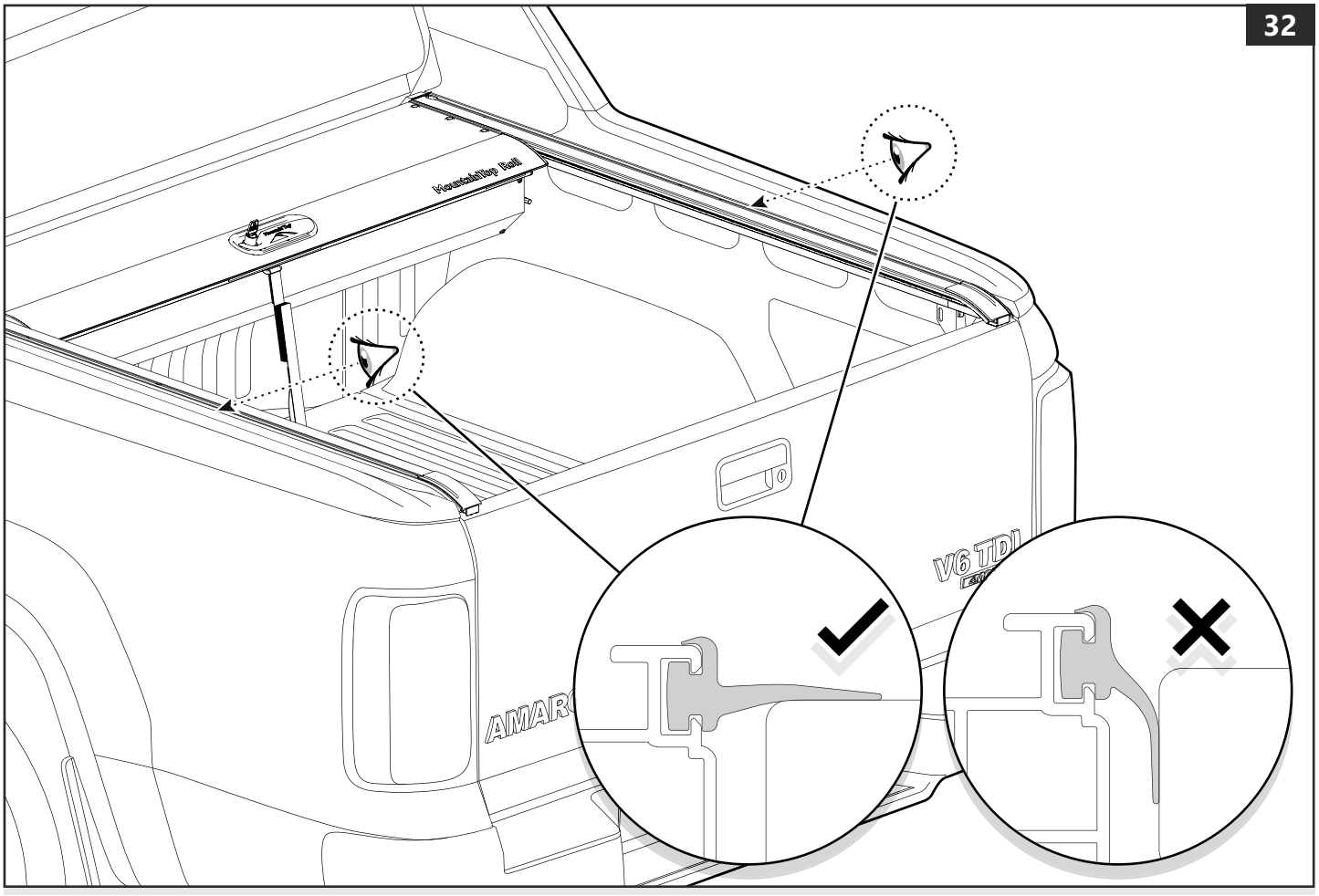
32
MountainTop Roll
V6 TDI
AMAR

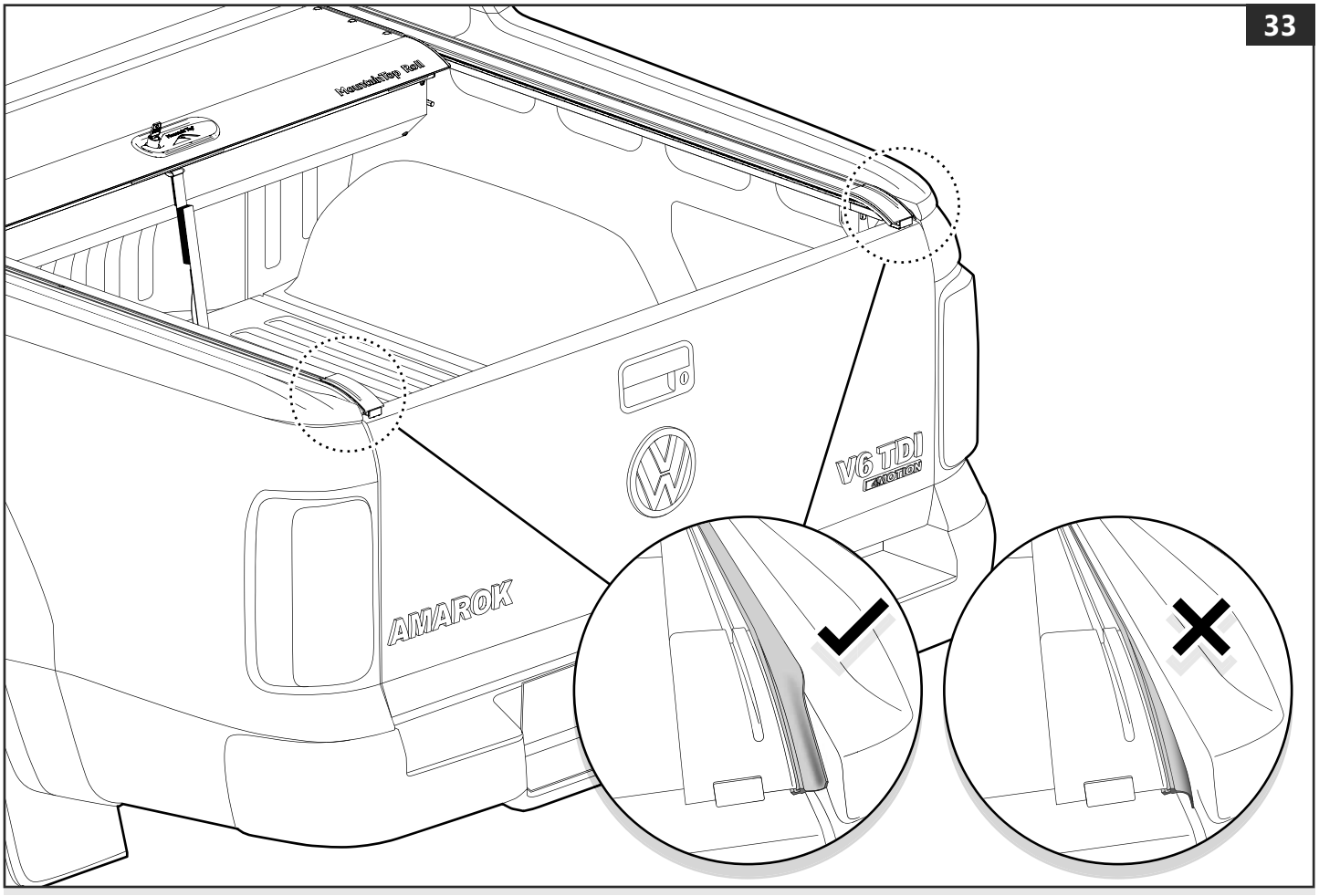
33
MountainTop Roll
V6 TDI
MOTION
AMAROK

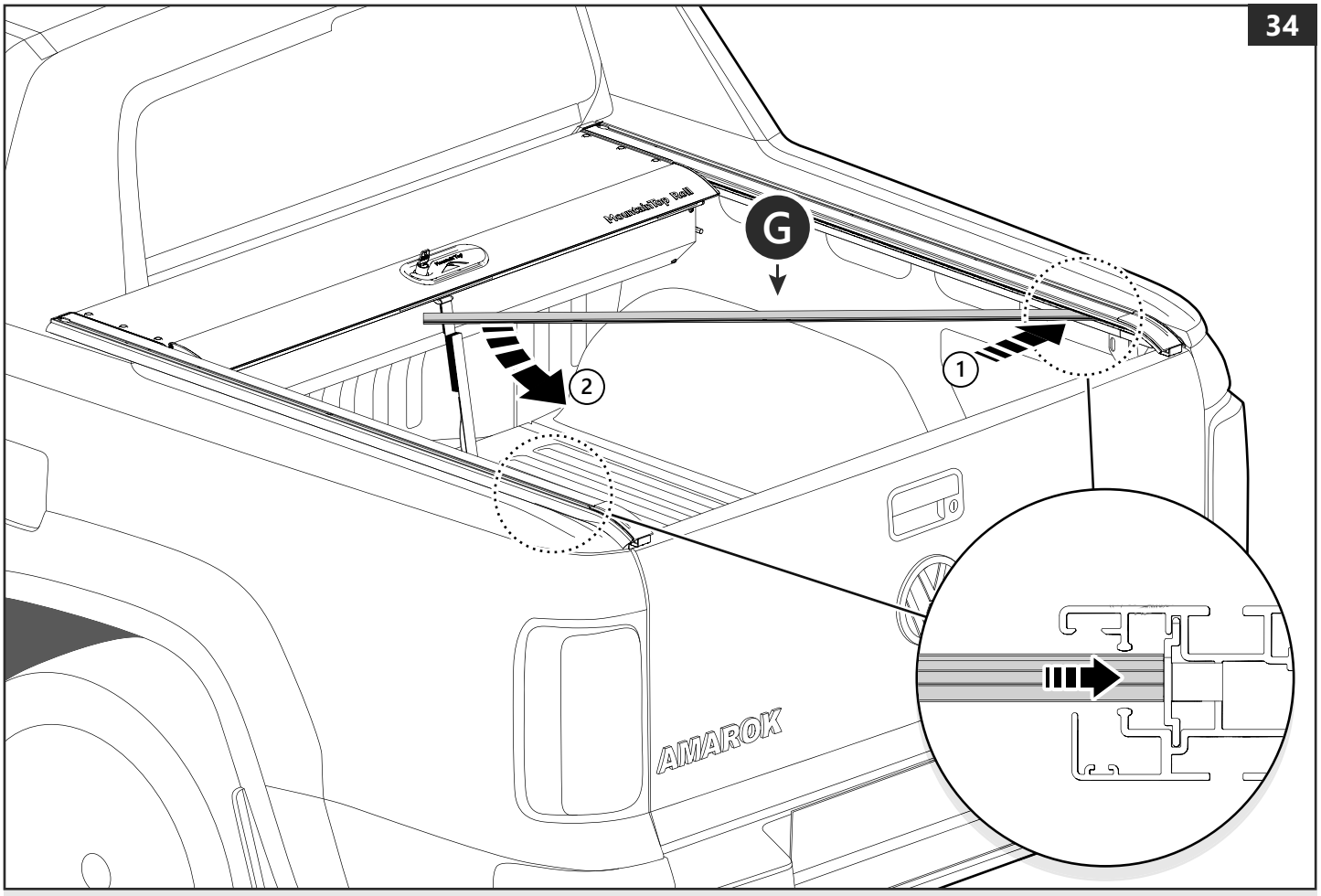
34
G
1
2
AMAROK

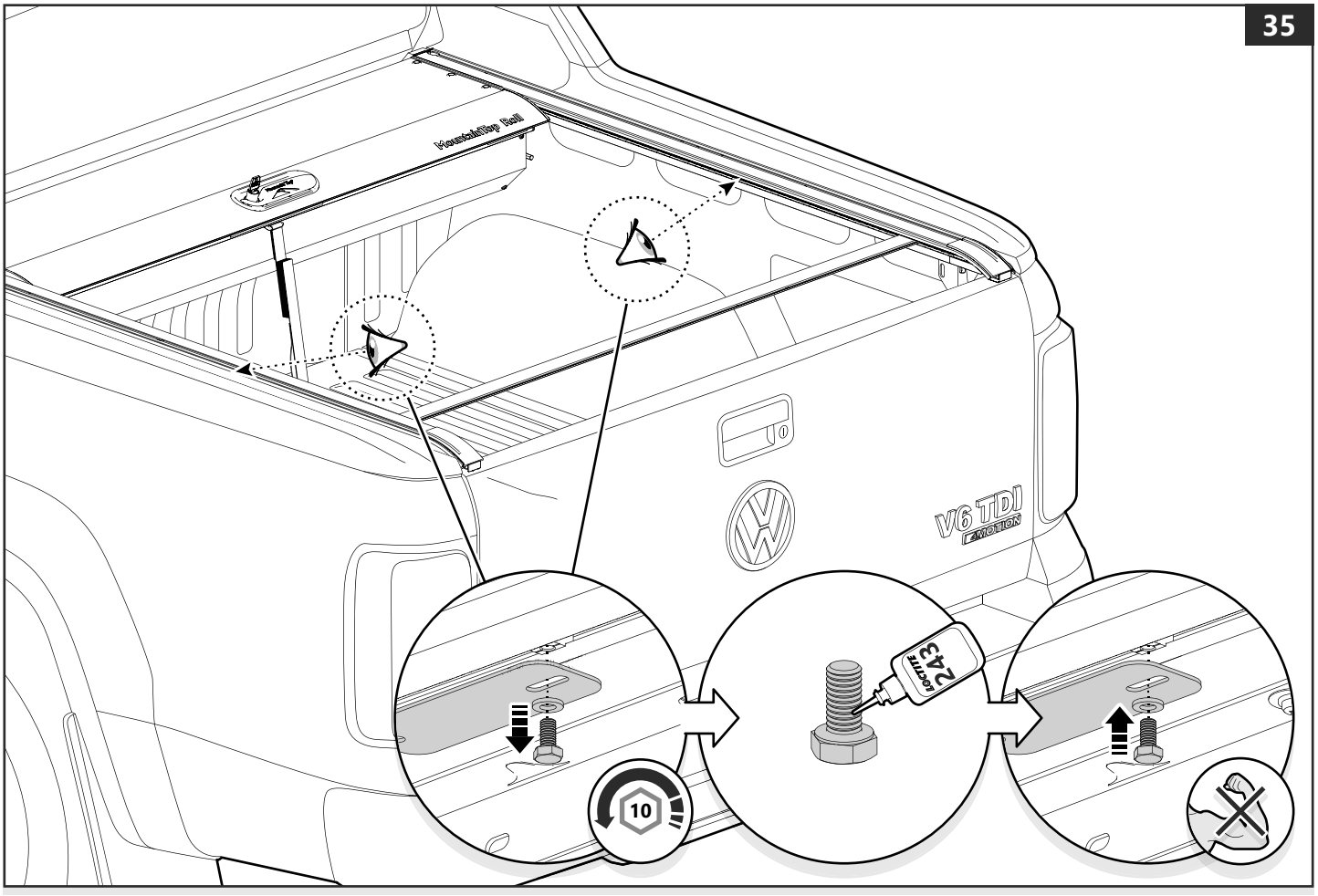
35
V6 TDI
4MOTION
10
loctite 243

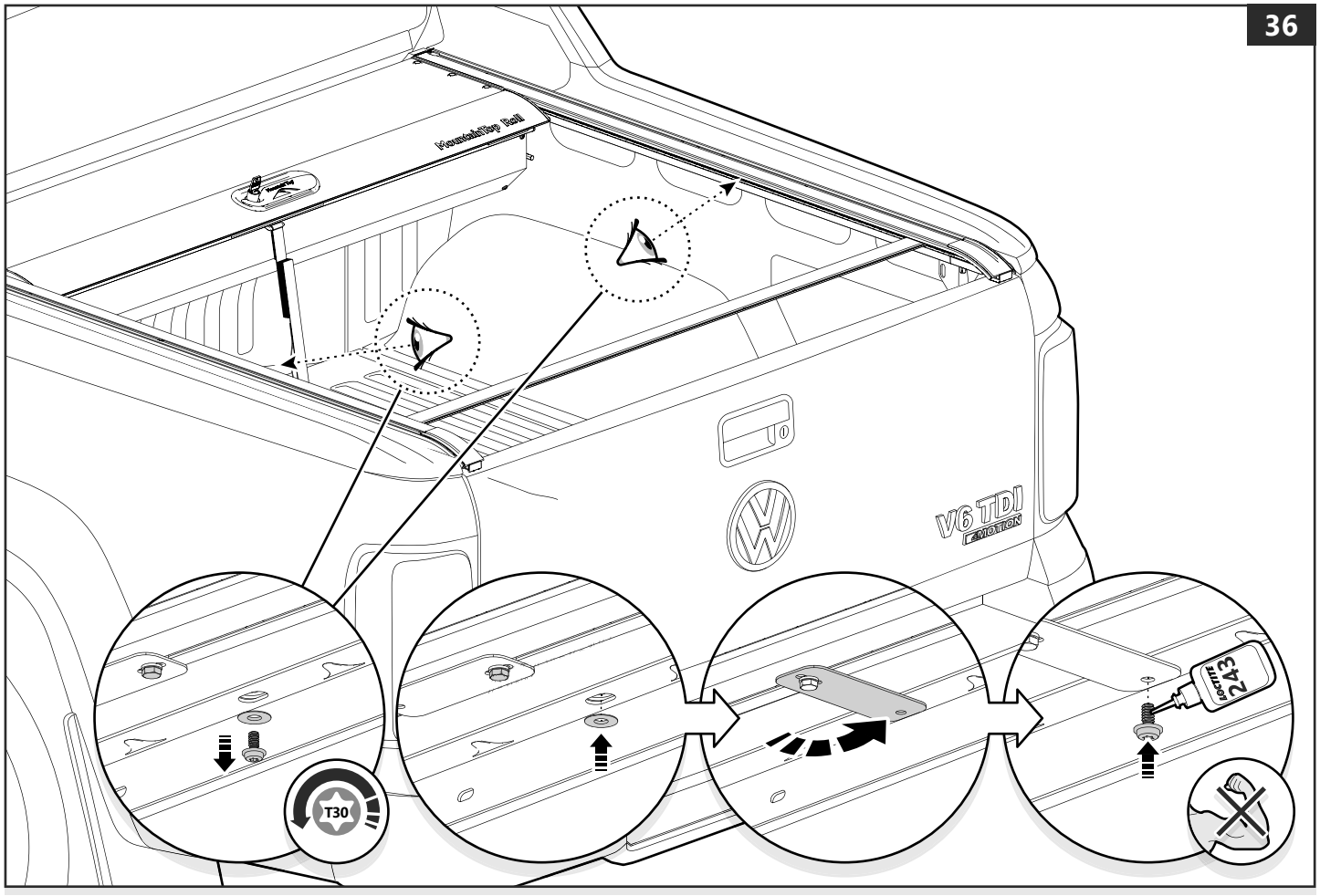
36
V6 TDI
4MOTION
T30
243
10Nm

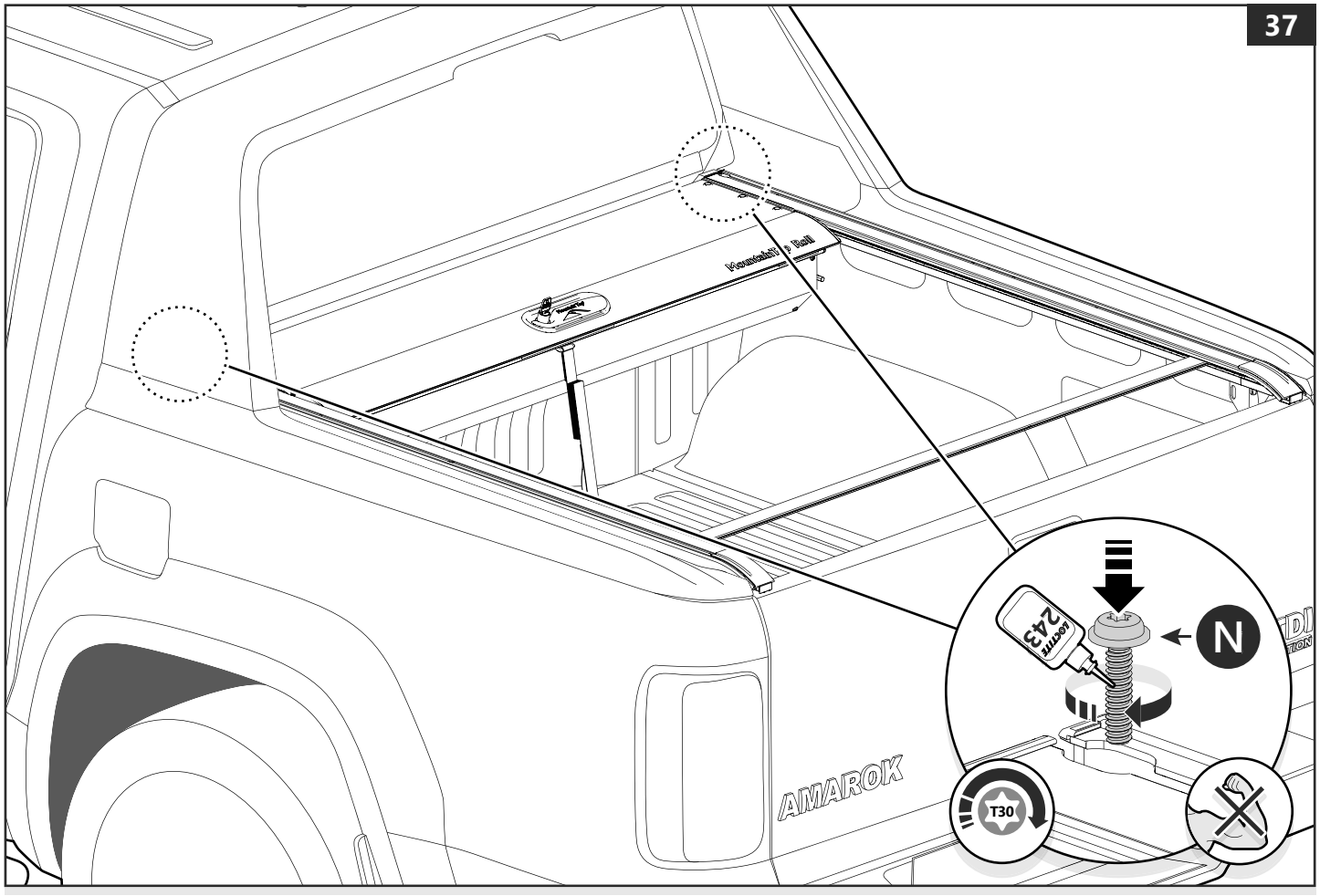
37
AMAROK
T30
243
10Nm
N

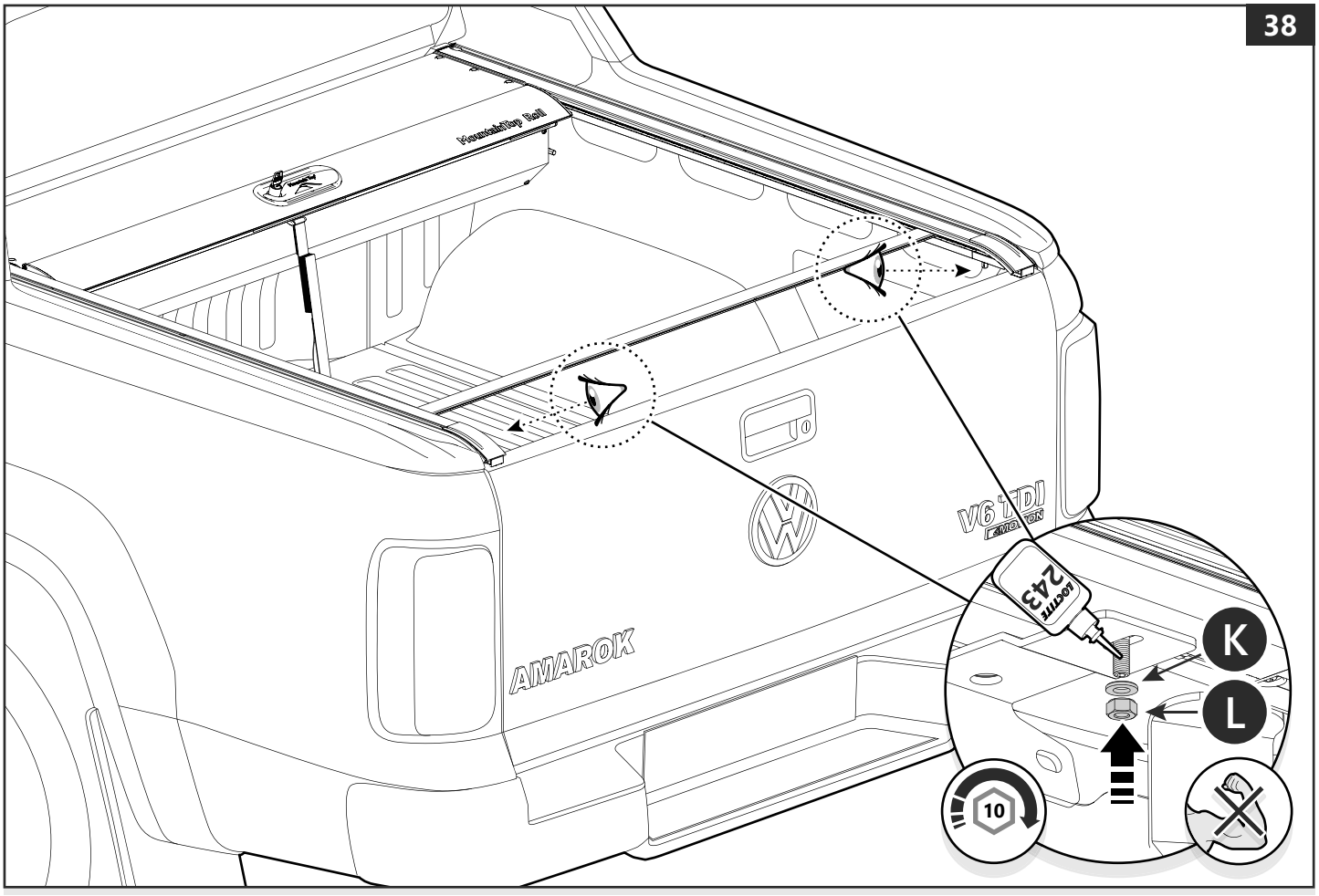
38
Kupplungskugel
AMAROK
V6 TDI
4MOTION
LOCTITE 243
K
L
10

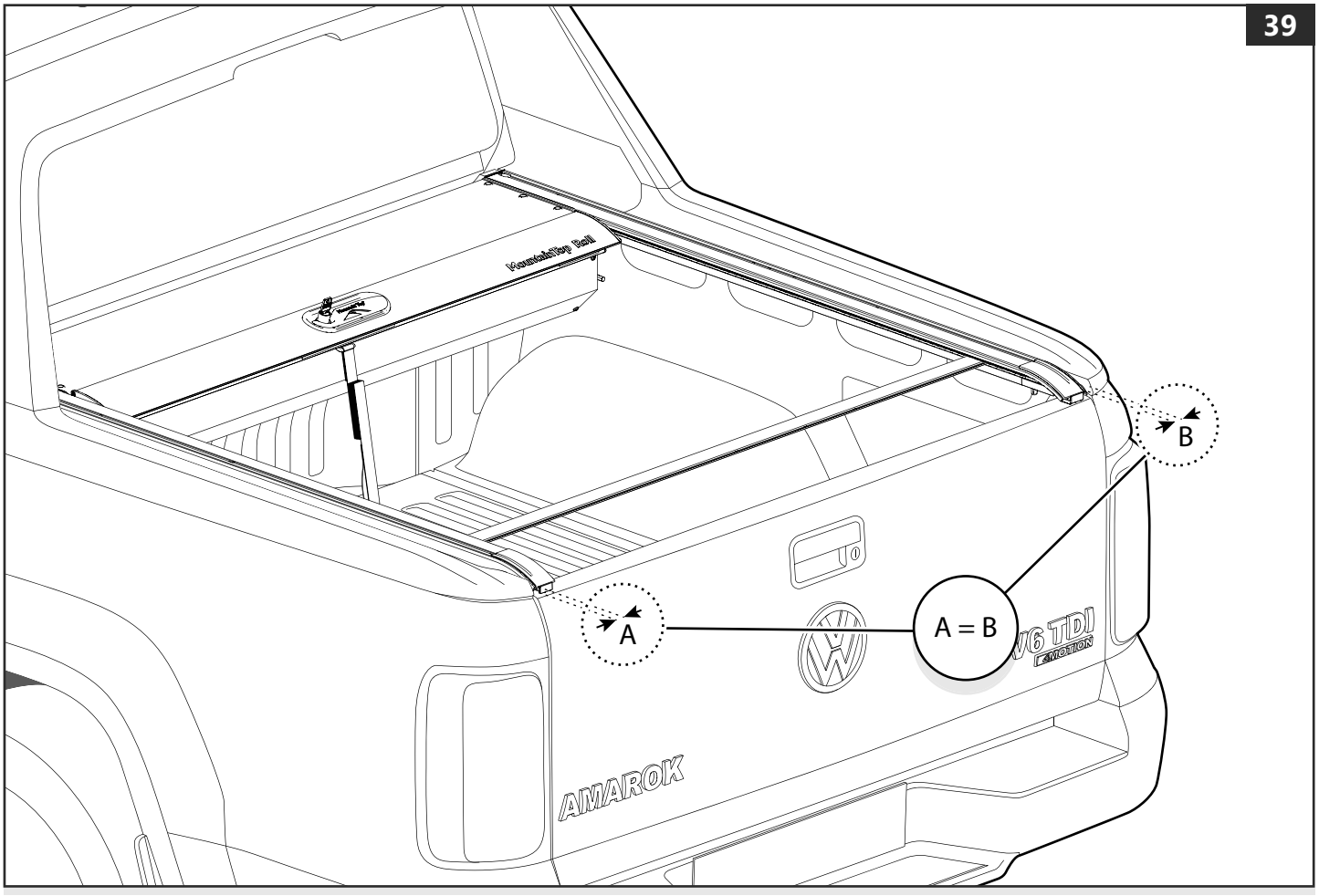
39
Kupplungskugel
A
B
A = B
AMAROK
V6 TDI
4MOTION

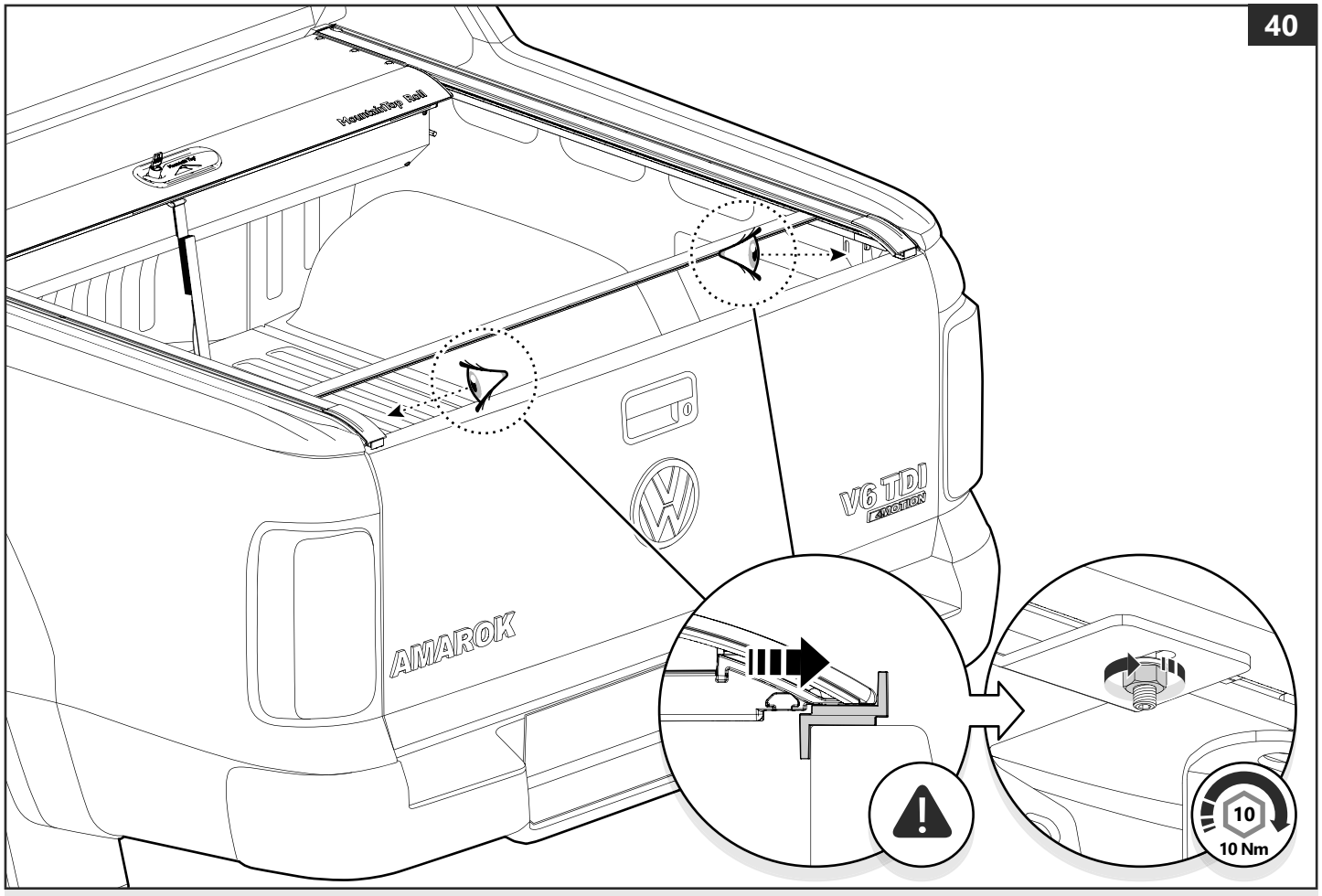
40
AMAROK
V6 TDI
4MOTION
10
10 Nm

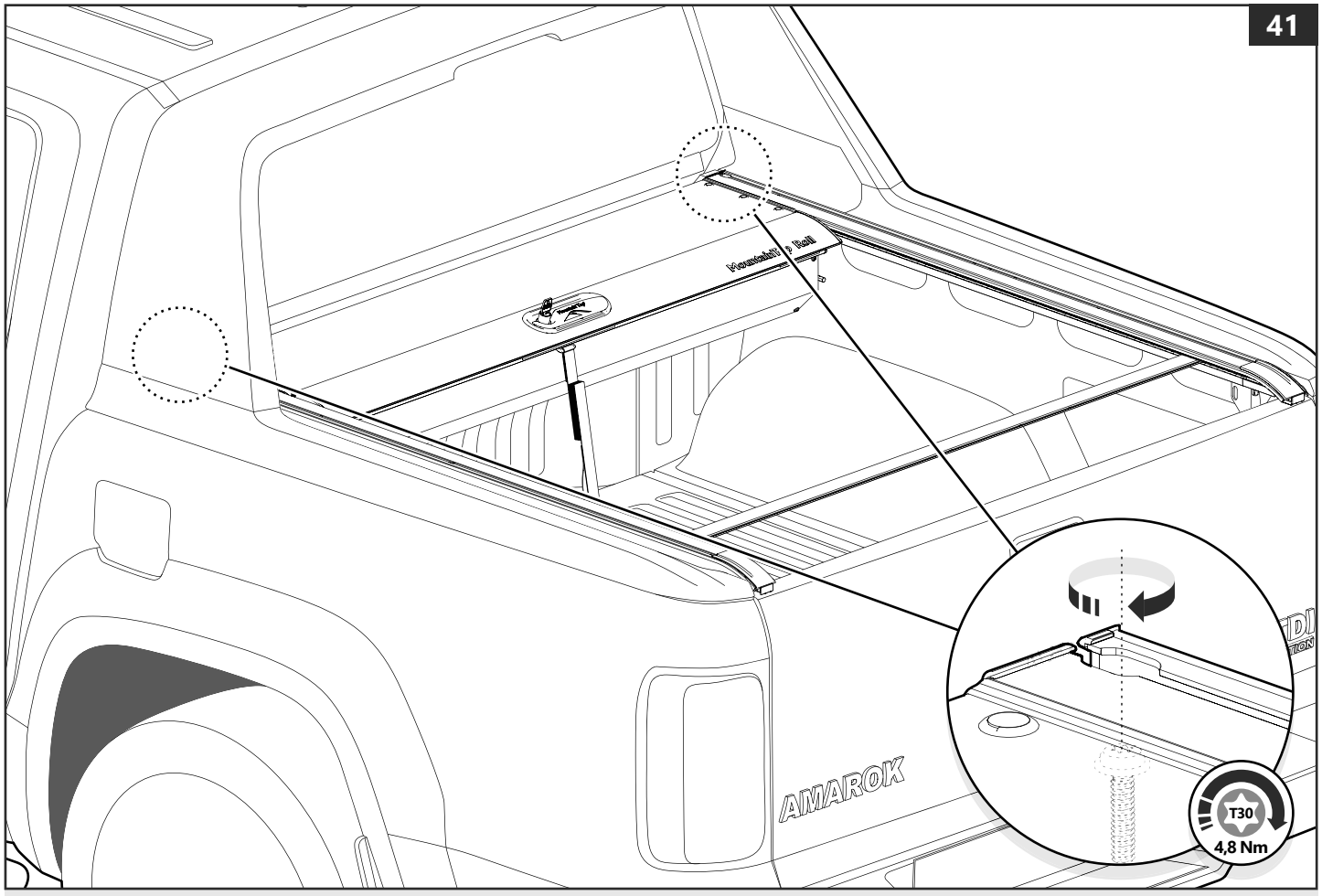
41
AMAROK
T30
4,8 Nm

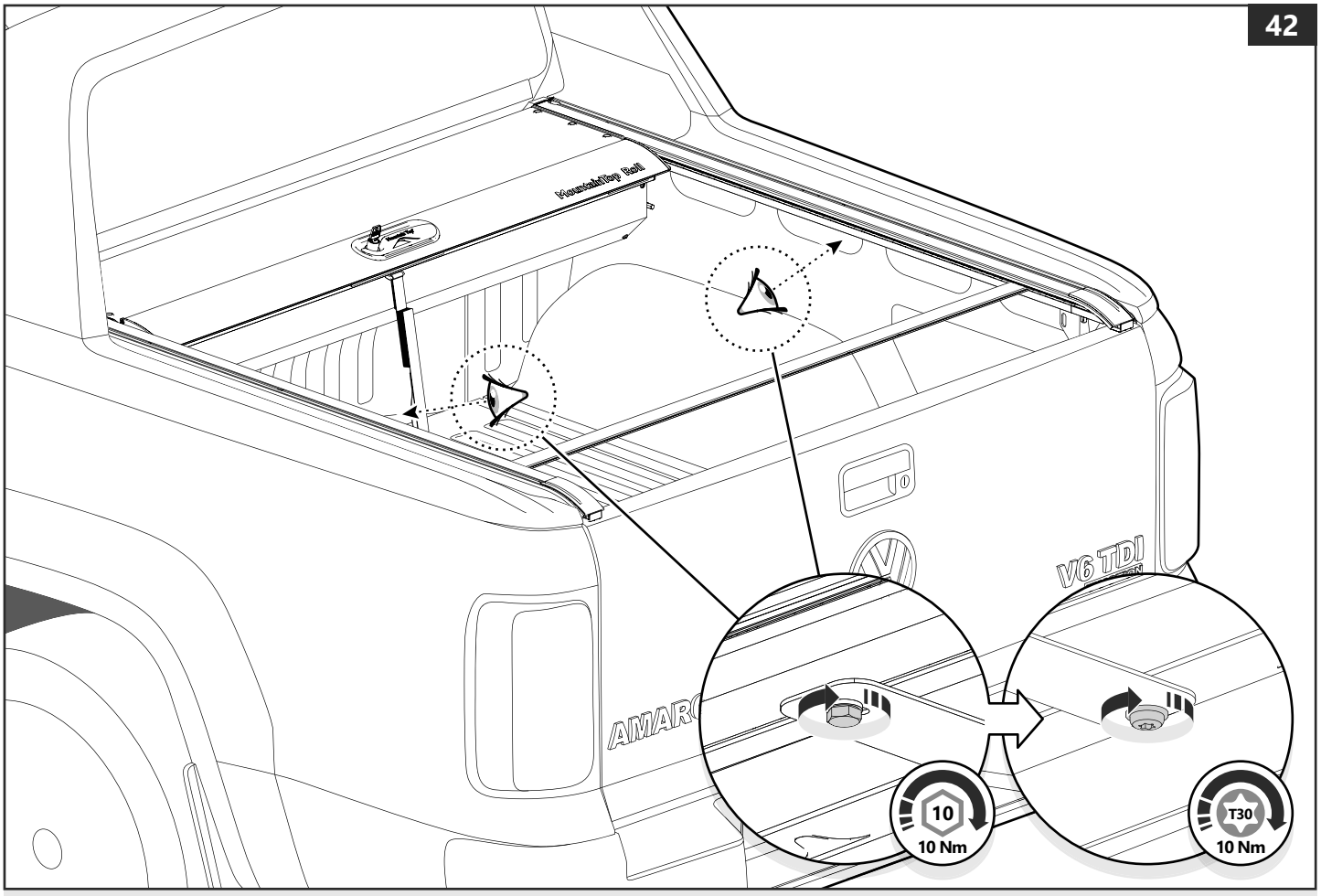
42
Mountaintop Roll
V6 TDI
AMAR
10
10 Nm
T30
10 Nm

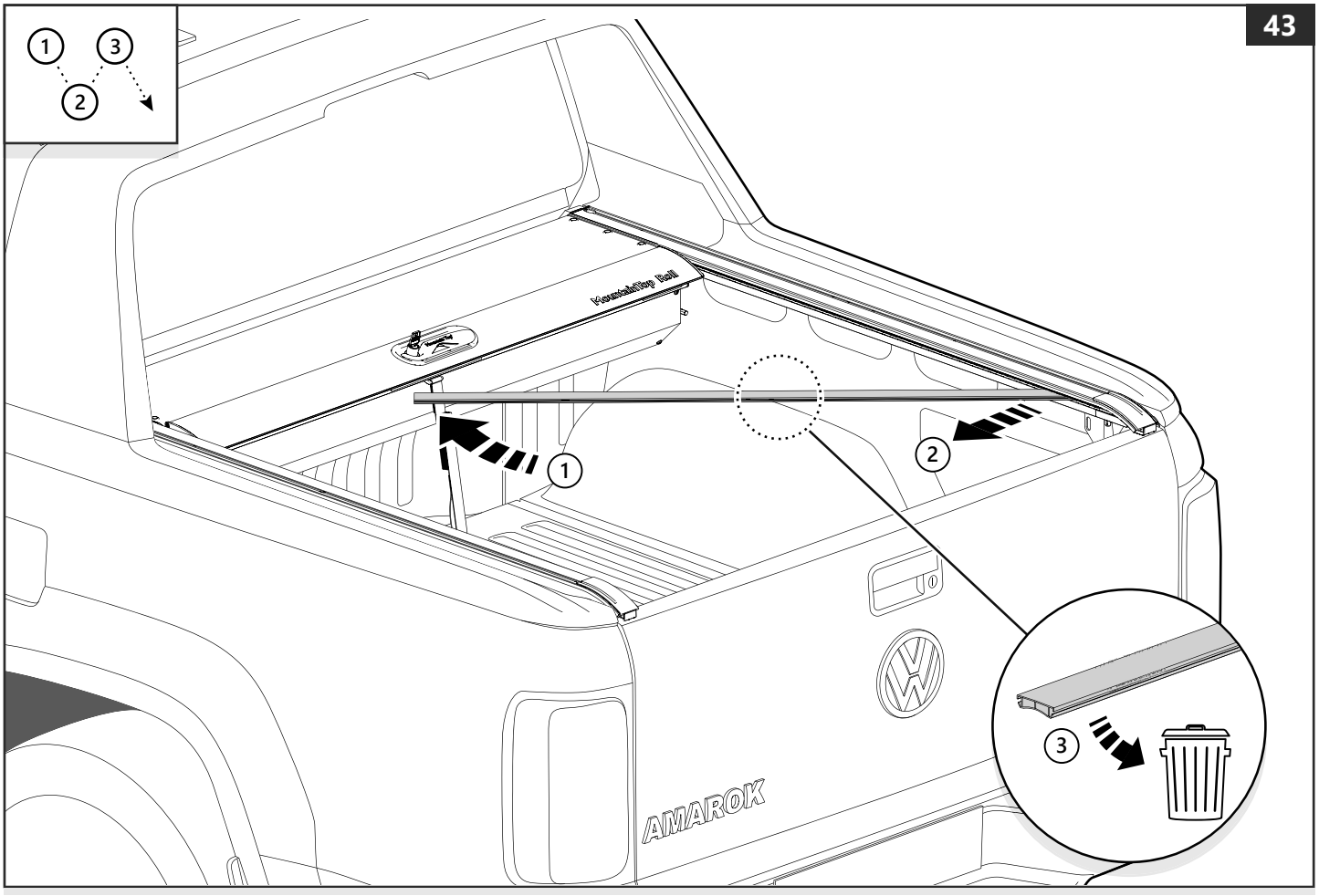
43
1
2
3
Mountaintop Roll
AMAROK

44

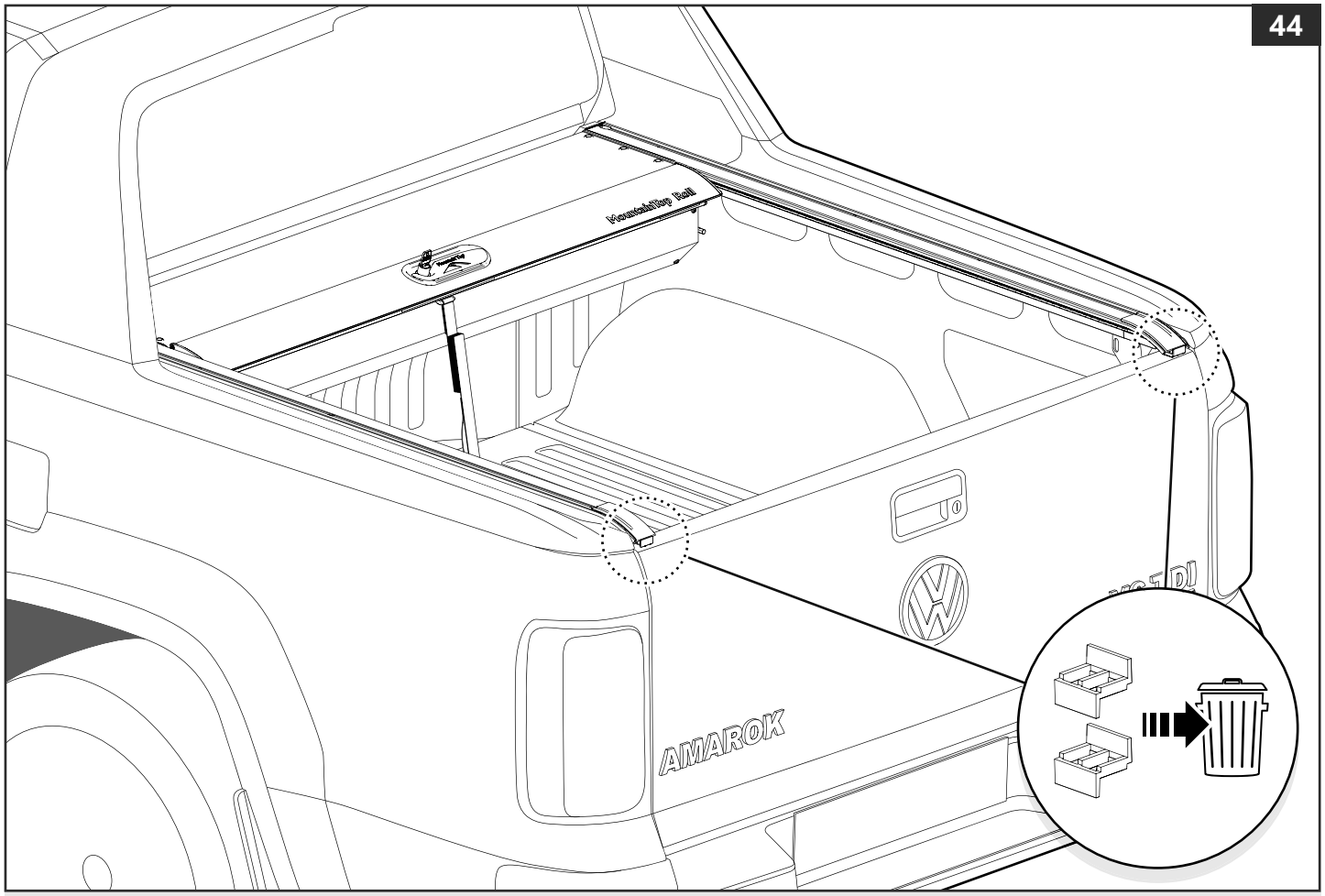

45

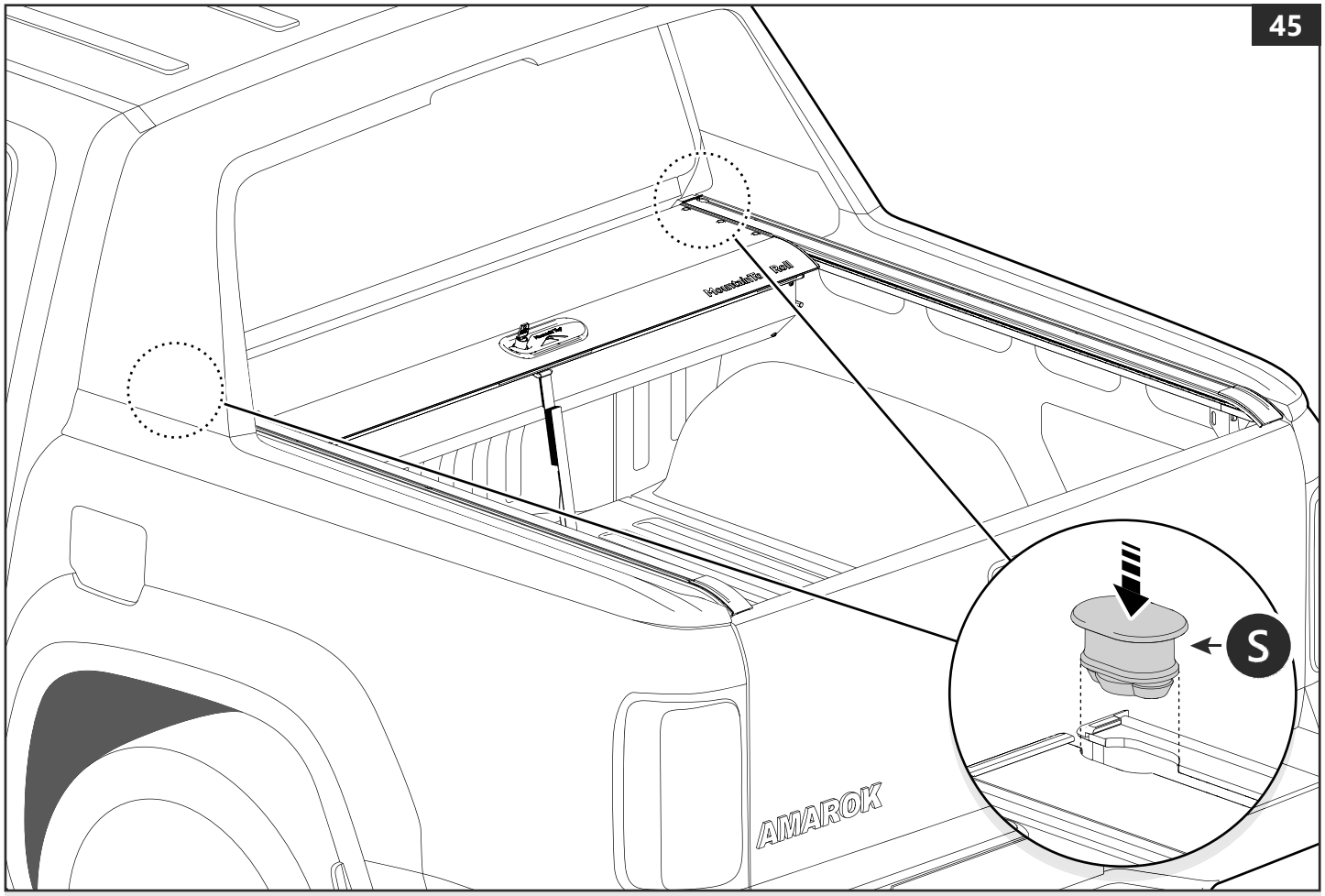

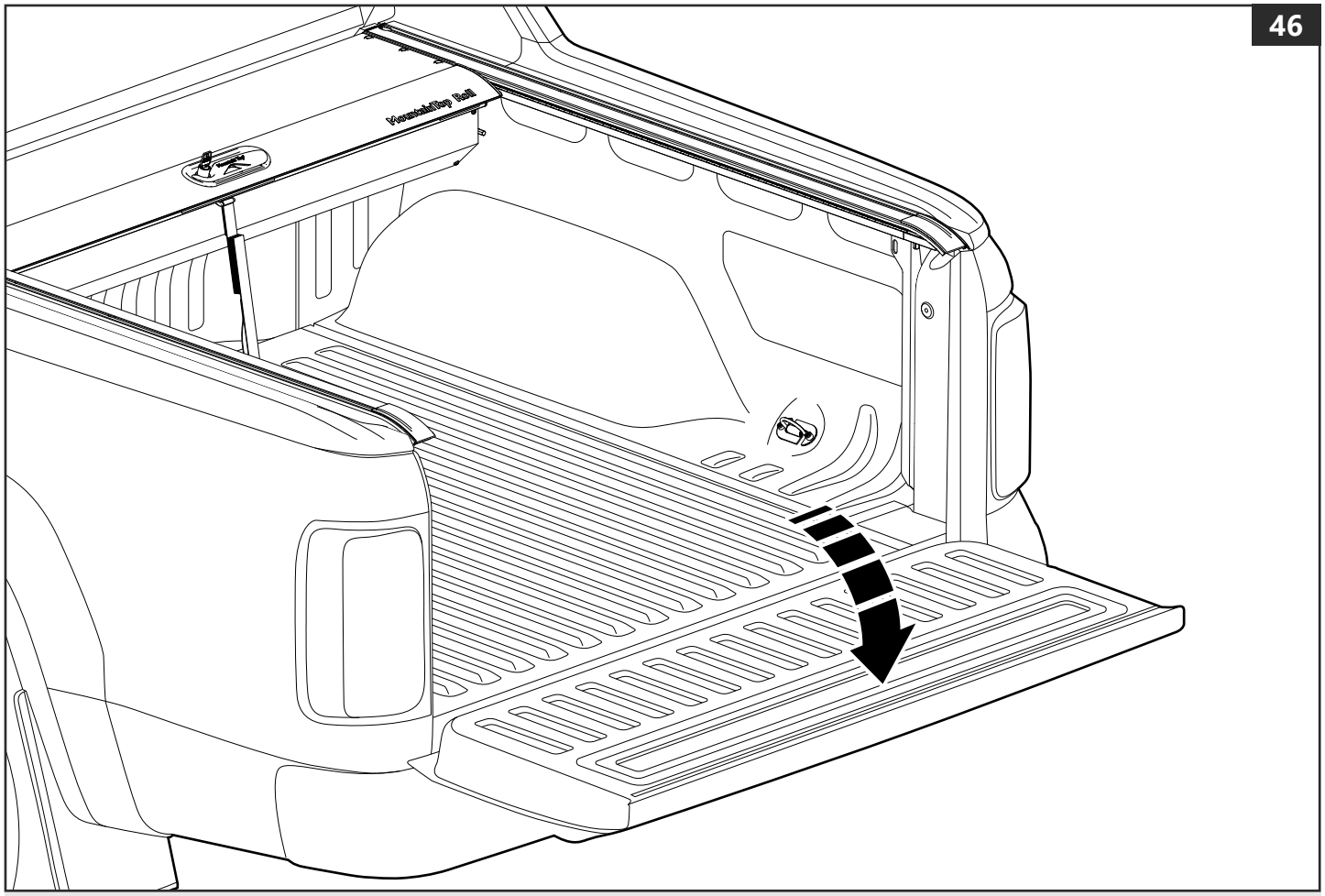
46

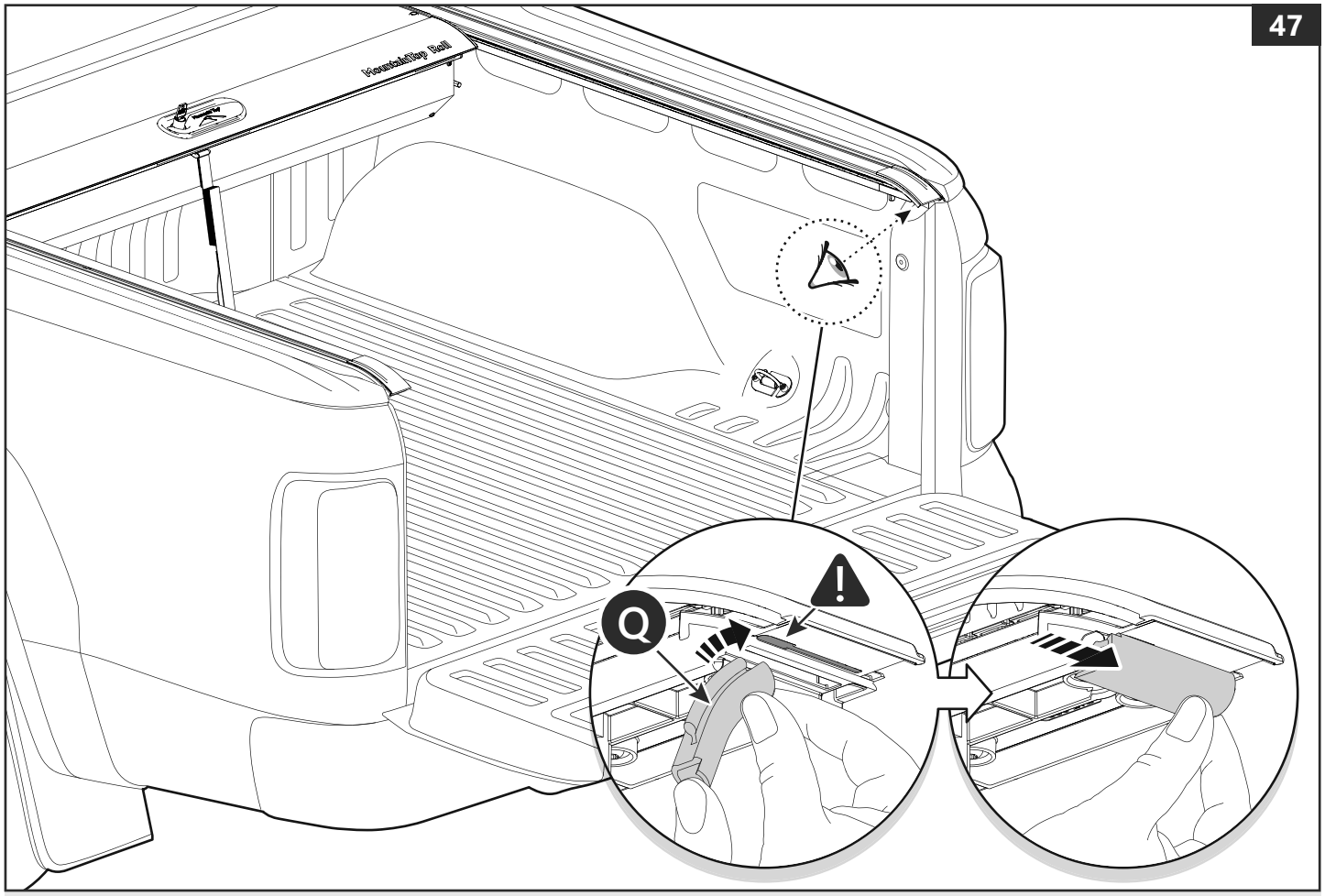
47
Q

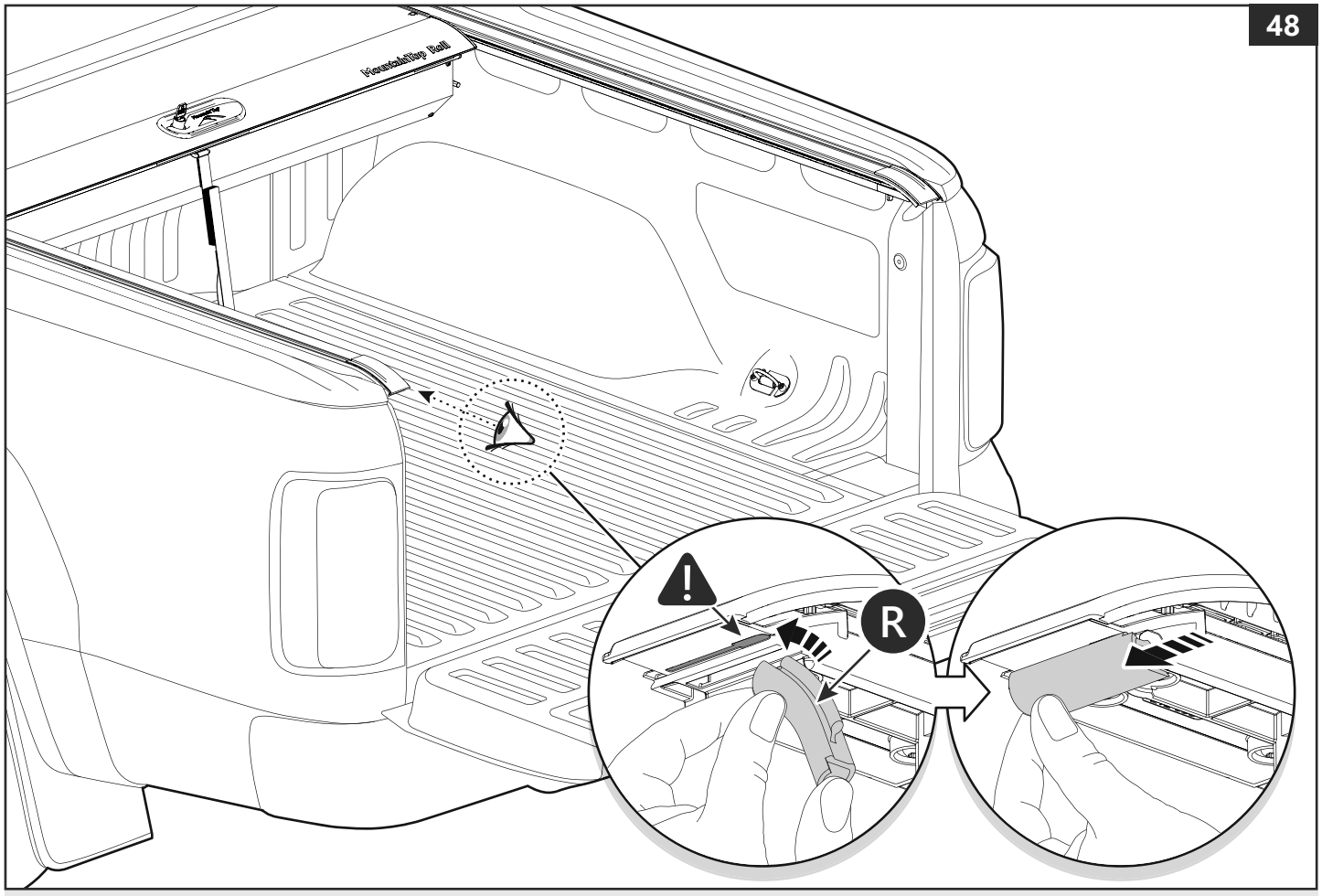
48
R

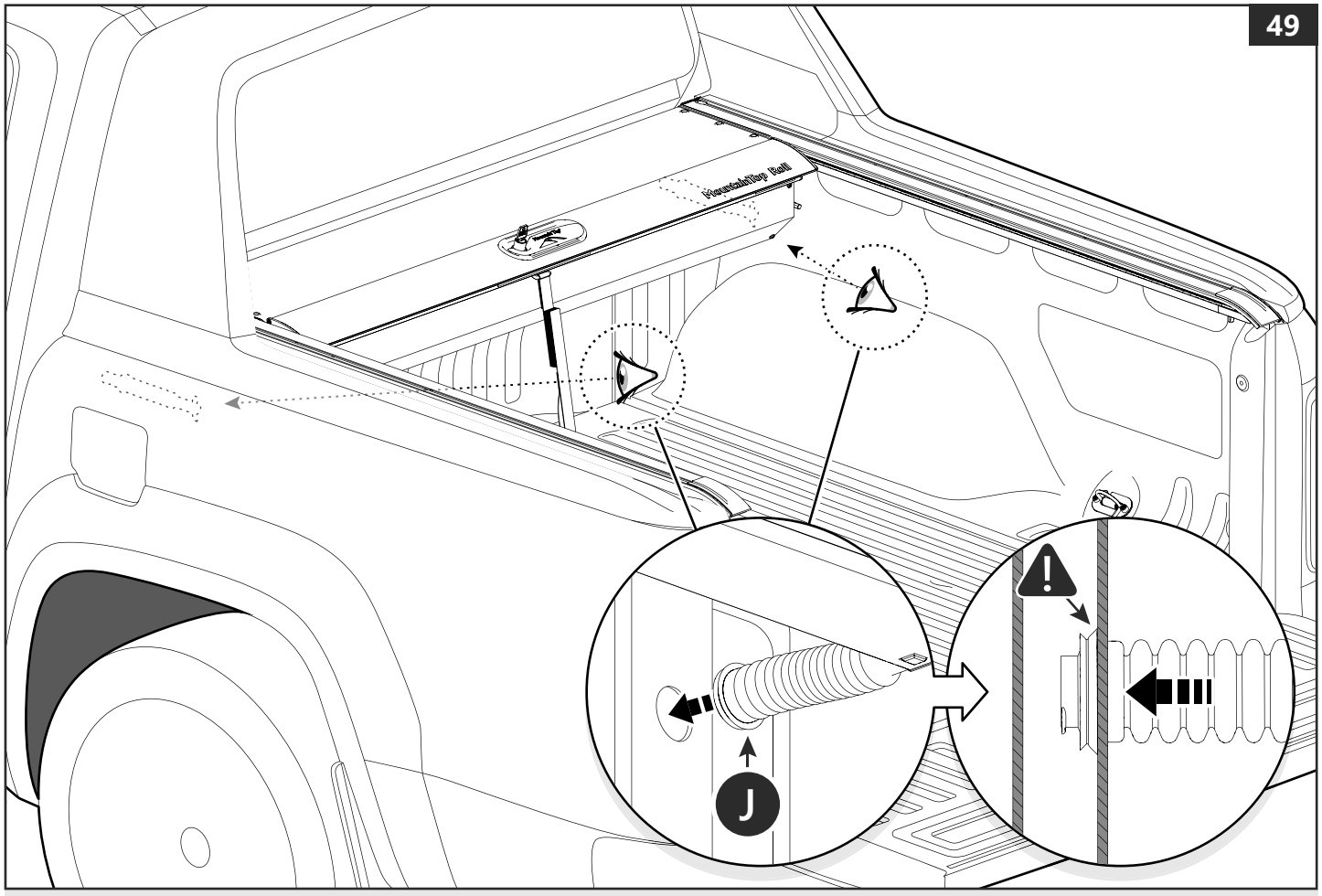
49
J

50

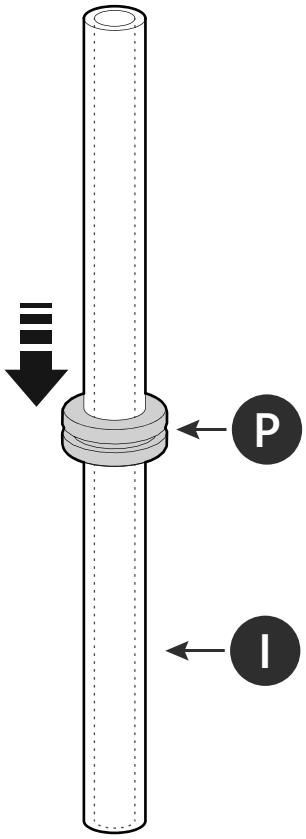

x 2

51

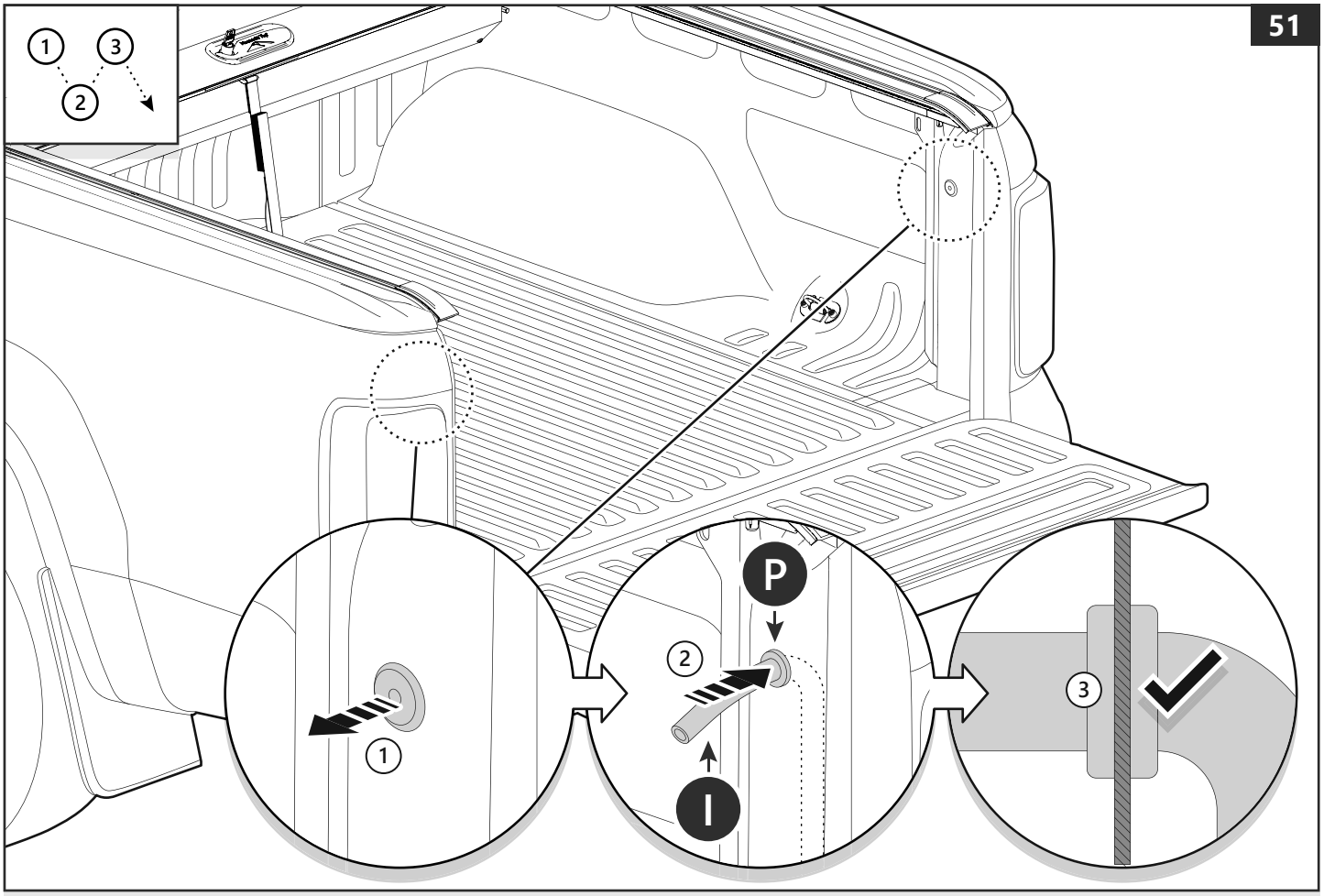

52

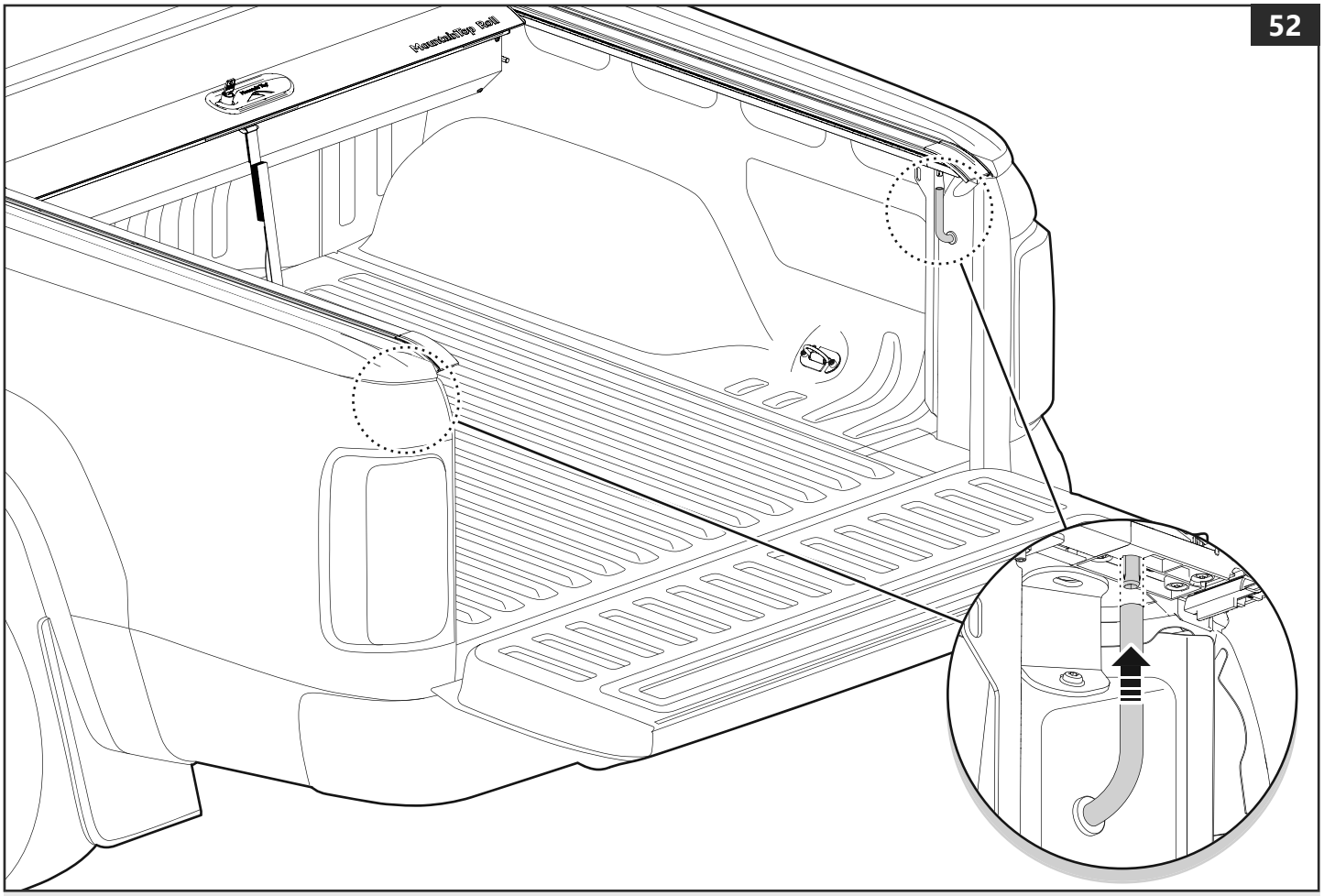
MountainTop Roll

53

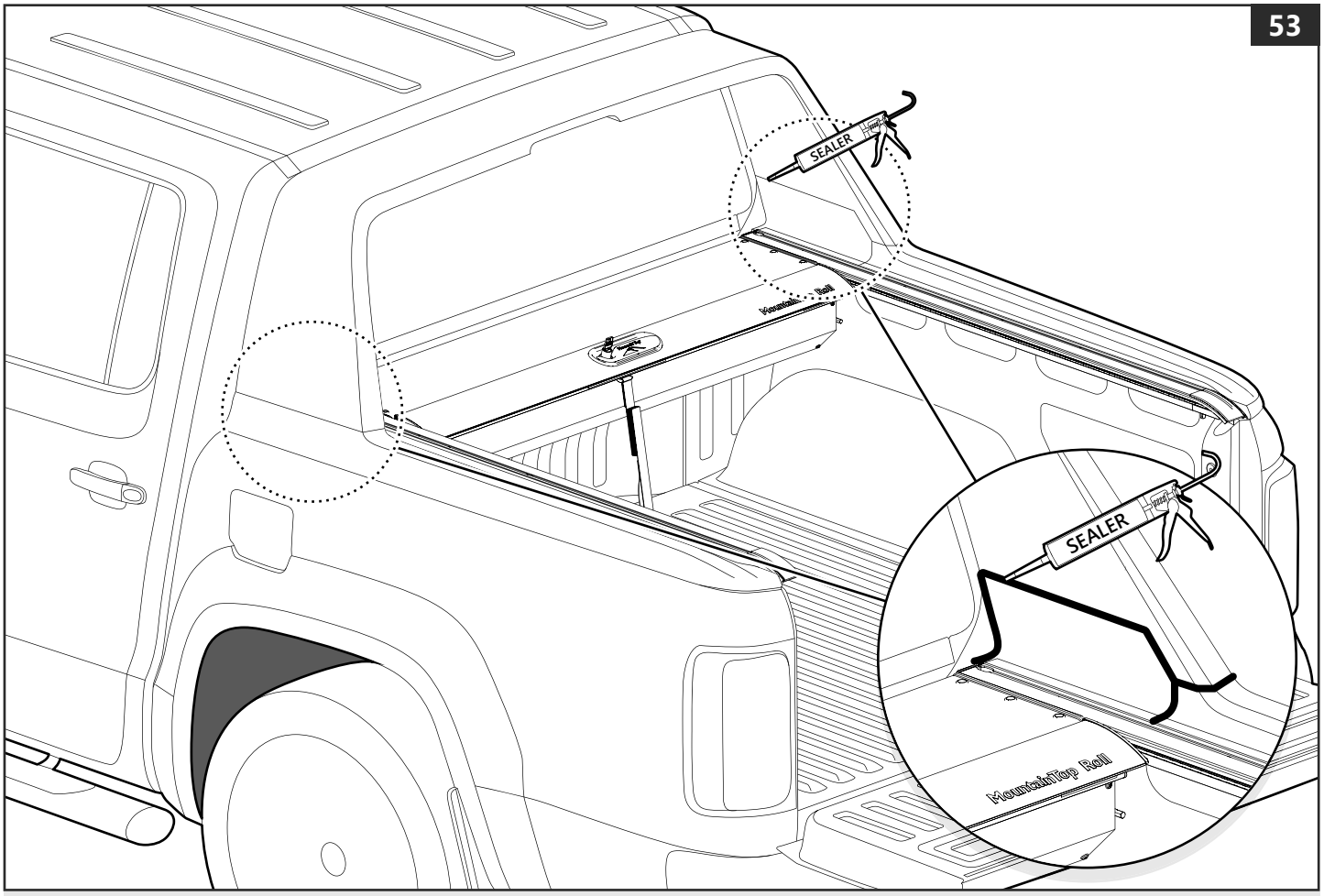
SEALER
MountainTop Roll
SEALER
MountainTop Roll

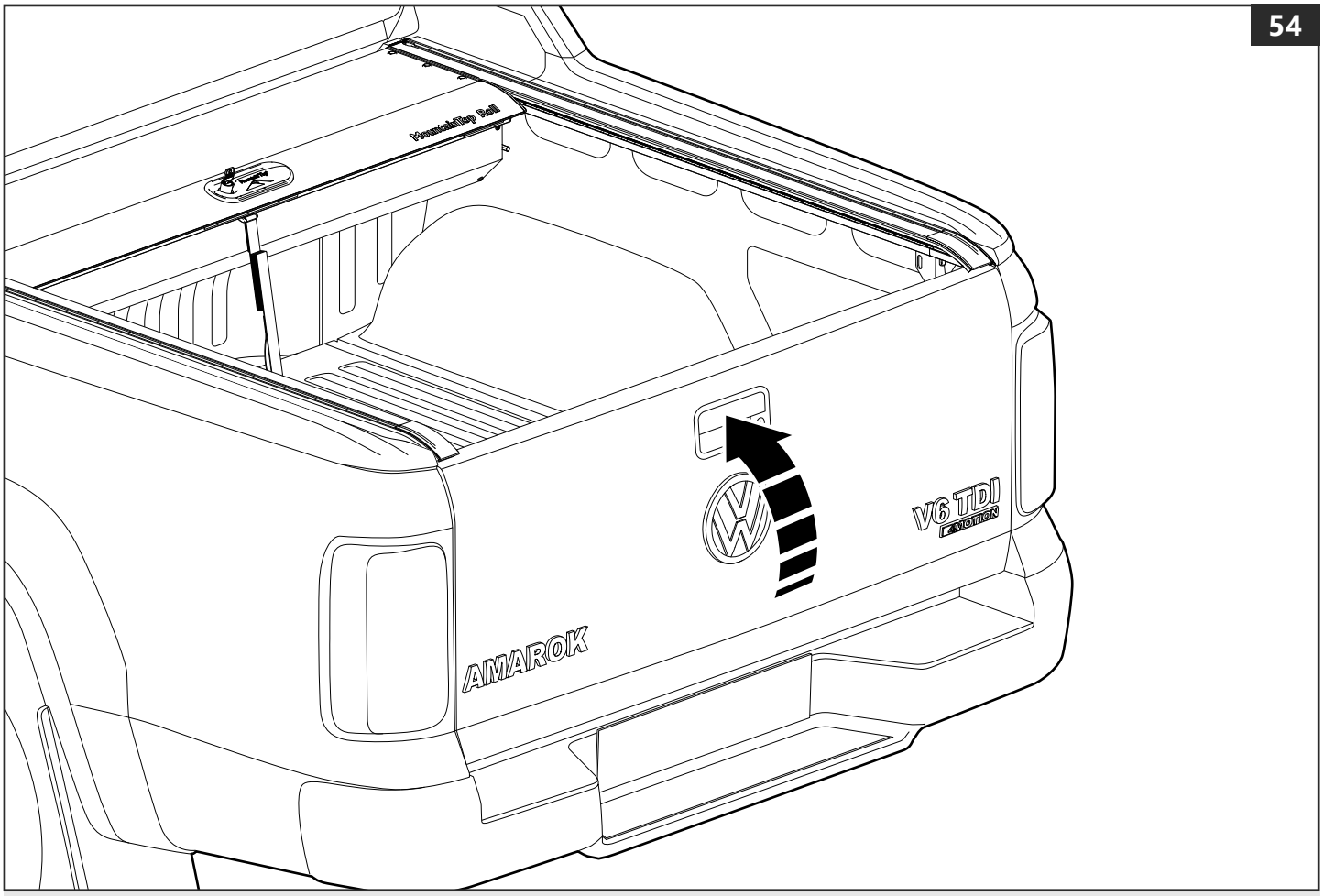
54
MountainTop Roll
V6 TDI
AMAROK

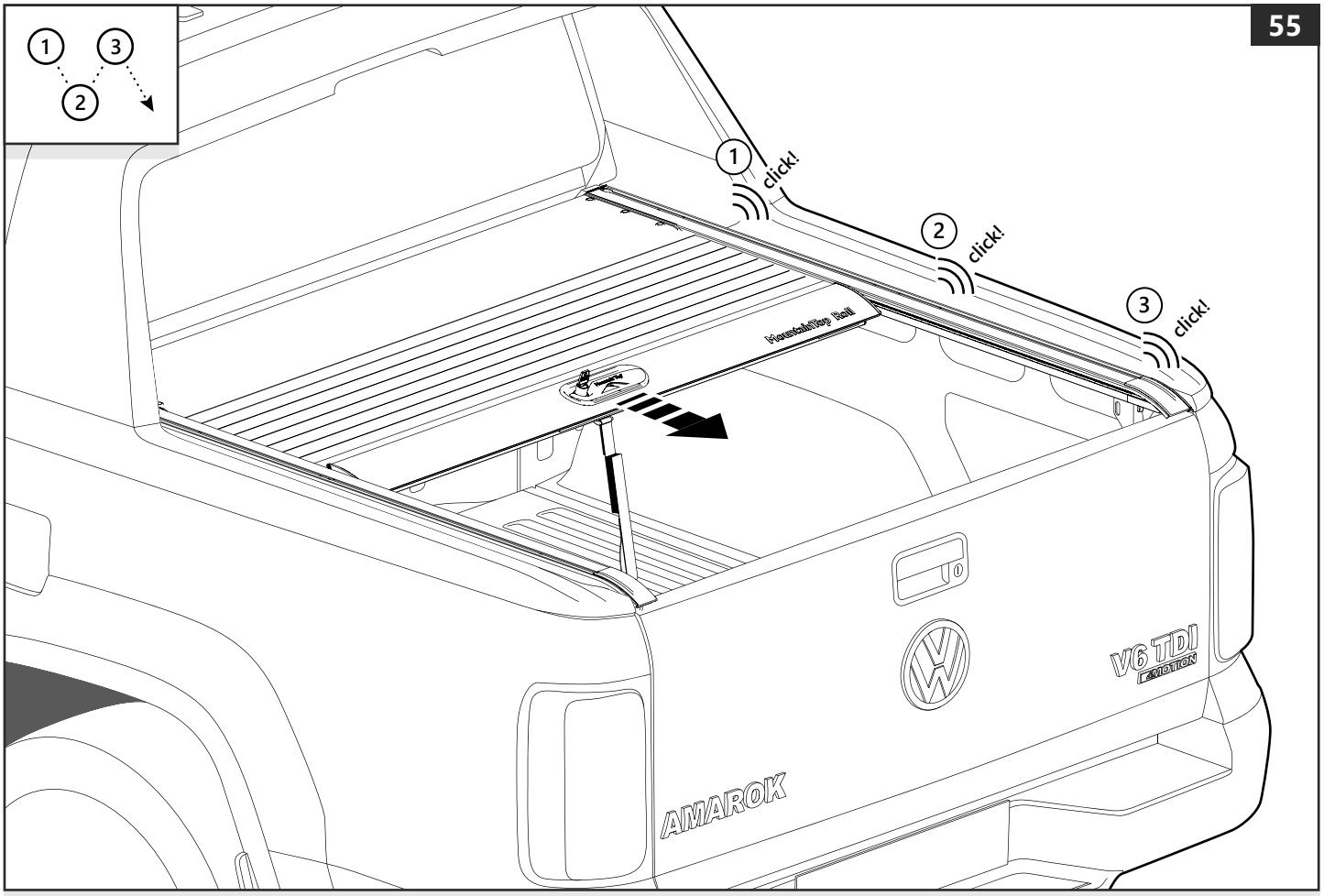
55
1
2
3
1
click!
2
click!
3
click!
MountainTop Roll
V6 TDI
AMAROK

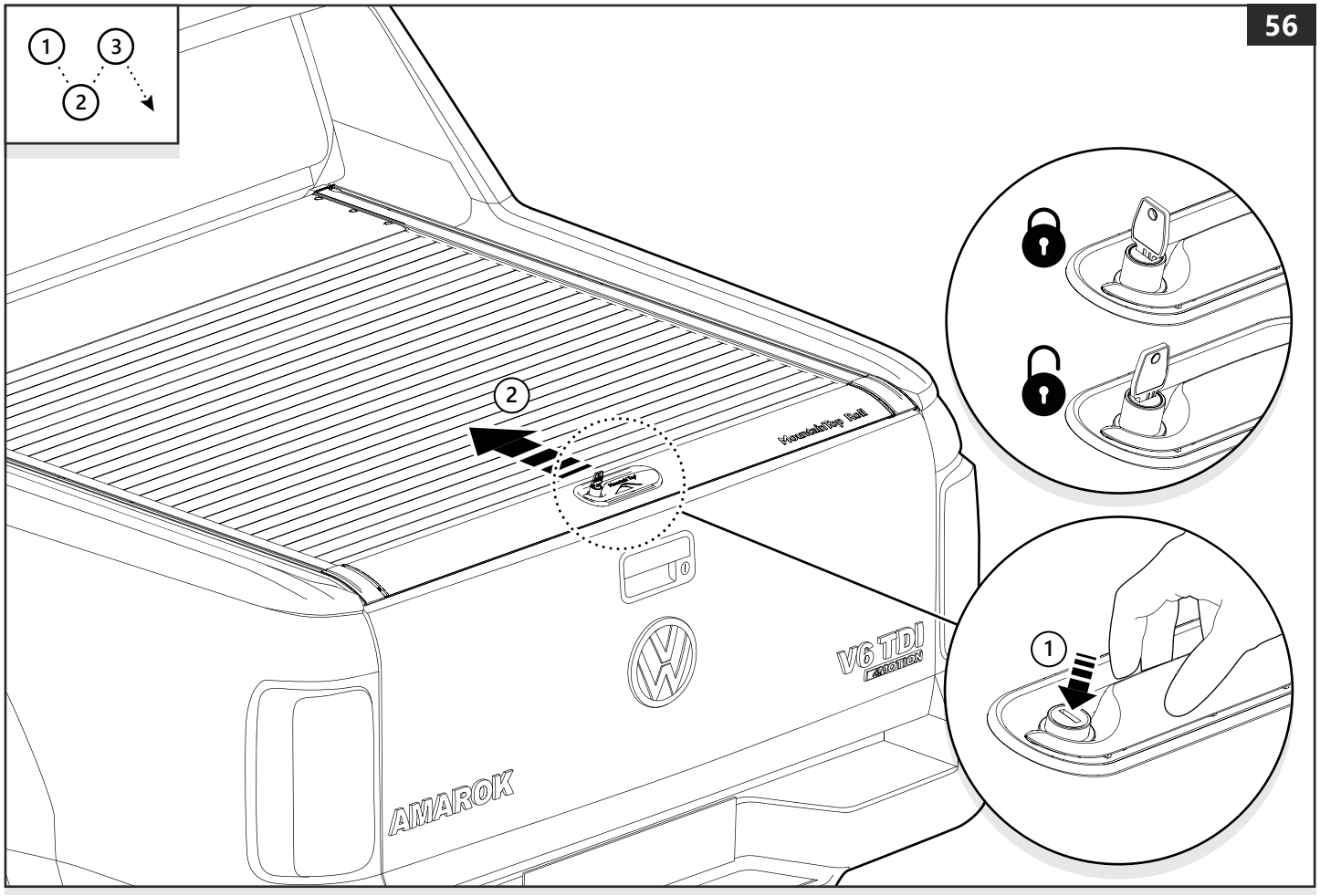
56
1
3
2
2
1
V6 TDI
AMAROK

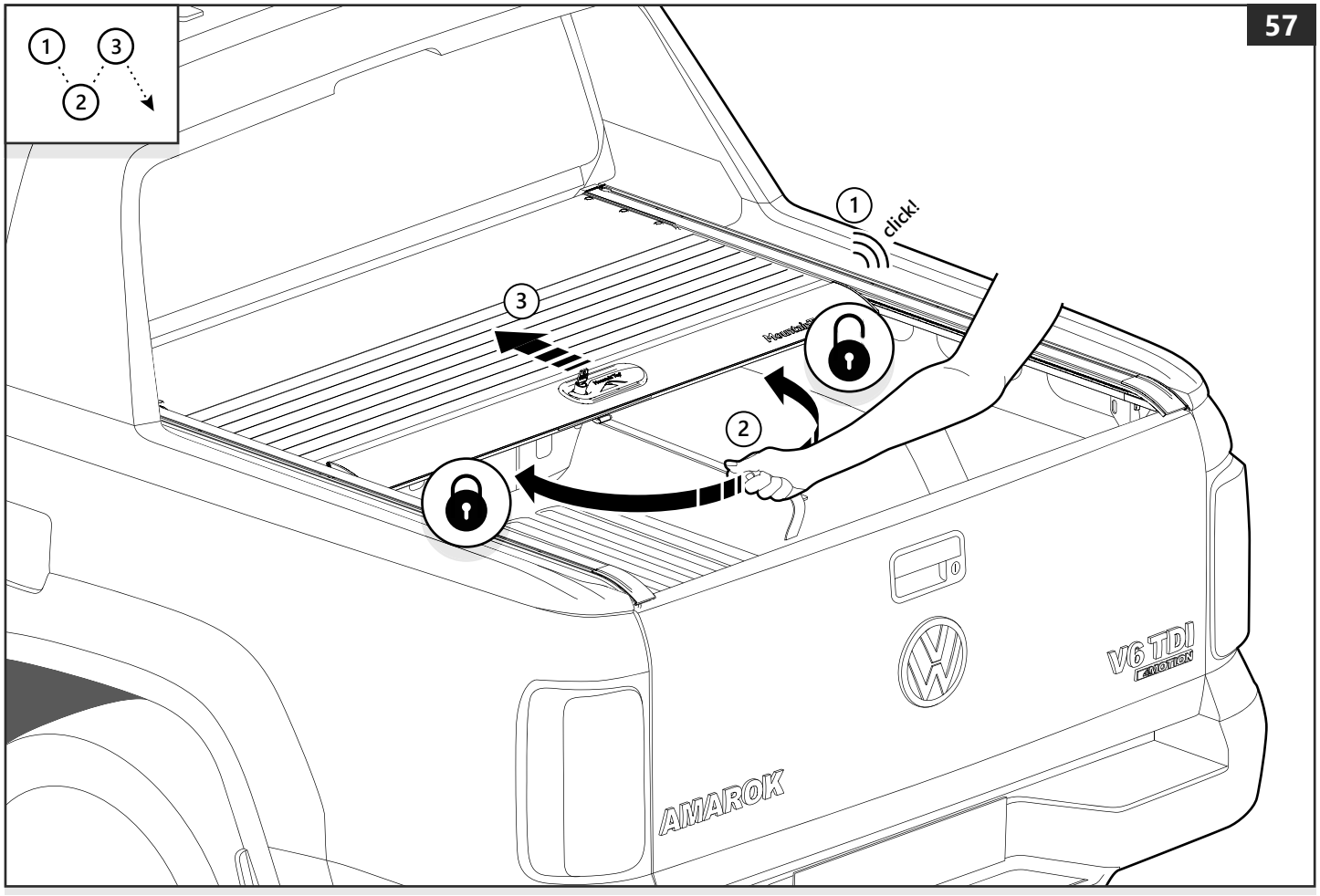
57
1
3
2
1
click!
2
3
V6 TDI
AMAROK

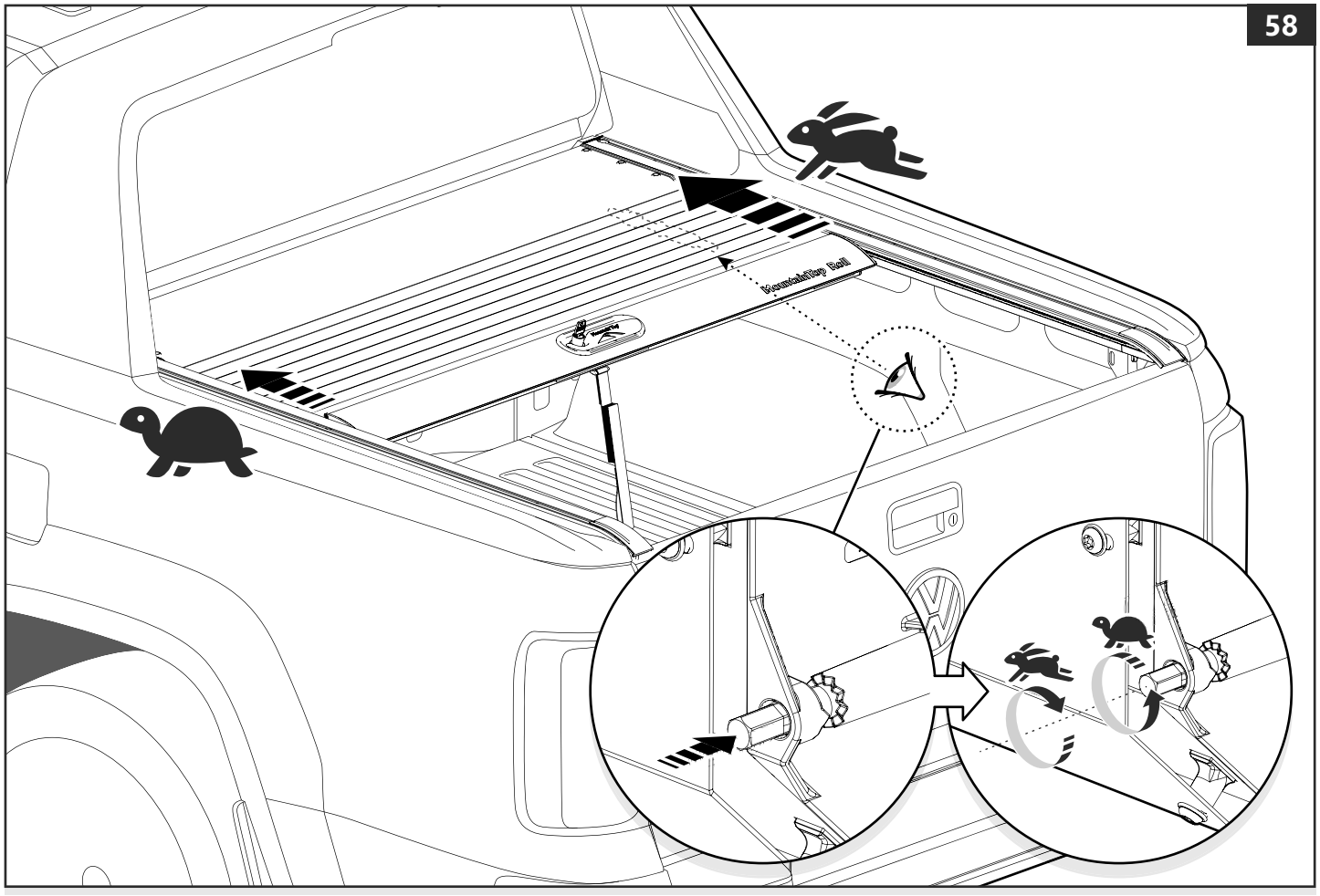
58

Kundenservice Deutschland	+49 89 80 990 2880
Ullstein Concepts GmbH	
Support	mail@ullsteinconcepts.com
Website	www.ullsteinconcepts.com
Address	Bahnhofstr. 20 - 85416 Langenbach

PART NUMBER(S)	MODEL / YEAR	CAB TYPE(S)	INSTALLATION TIME	WEIGHT
MTR VW80 H02	Amarok / 2017 →	Double	2 hour(s)	31-36 Kg

GB	Installation manual	**S**	Monteringsanvisning	**D**	Einbauanleitung
SF	Asennusohje	**E**	Instrucciones de montaje	**CZ**	Návod k instalaci
F	Notice de montage	**H**	Szerelési utasítás	**I**	Istruzioni de montaggio
		P	Instruções de instalação	**GR**	Οδηγίες Εγκατάστασης
		RUS	Инструкция по установке	**DK**	Monteringsvejledning
TR	Montaj Talimatı	**N**	Monteringsveiledning	**RO**	Instructiuni de instalare